EXPERIMENT MANUAL

ROBOTICS

SMART MACHINES

TRACKS & TREADS



THAMES & KOSMOS

Franckh-Kosmos Verlags-GmbH & Co. KG, Pfizerstr. 5-7, 70184 Stuttgart, Germany | +49 (0) 711 2191-0 | www.kosmos.de
Thames & Kosmos, 301 Friendship St., Providence, RI, 02903, USA | 1-800-587-2872 | www.thamesandkosmos.com
Thames & Kosmos UK LP, 20 Stone Street, Cranbrook, Kent, TN17 3HE, UK | 01580 713000 | www.thamesandkosmos.co.uk

Safety Information

WARNING. Only for use by children aged 8 years and older. Instructions for parents or other supervising adults are included and have to be observed. Keep packaging and instructions as they contain important information.

WARNING. Not suitable for children under 3 years. Choking hazard — small parts may be swallowed or inhaled.
Store the experiment material and assembled models out of the reach of small children.

Safety for Experiments with Batteries

››› The wires are not to be inserted into socket-outlets. Never perform experiments using household current! The high voltage can be extremely dangerous or fatal!

››› To operate the models, you will need three AA batteries (1.5-volt, type AA/LR6) or three AA rechargeable batteries (1.2-volt, type AA, HR6/KR6), which could not be included in the kit due to their limited shelf life.

››› The supply terminals are not to be short-circuited. A short circuit can cause the wires to overheat and the batteries to explode.

››› Different types of batteries or new and used batteries are not to be mixed.

››› Do not mix old and new batteries.

››› Do not mix alkaline, standard (carbon-zinc), or rechargeable (nickel-cadmium) batteries.

››› Batteries are to be inserted with the correct polarity. Press them gently into the battery compartment. See page 2.

››› Always close battery compartments with the lid.

››› Non-rechargeable batteries are not to be recharged. They could explode!

››› Rechargeable batteries are only to be charged under adult supervision.

››› Rechargeable batteries are to be removed from the toy before being charged.

››› Exhausted batteries are to be removed from the toy.

››› Dispose of used batteries in accordance with environmental provisions, not in the household trash.

››› Be sure not to bring batteries into contact with coins, keys, or other metal objects.

››› Avoid deforming the batteries.

As all of the experiments use batteries, have an adult check the experiments or models before use to make sure they are assembled properly. Always operate the motorized models under adult supervision.
After you are done experimenting, remove the batteries from the battery compartments. Note the safety information accompanying the individual experiments or models!

Notes on Disposal of Electrical and Electronic Components

The electronic components of this product are recyclable. For the sake of the environment, do not throw them into the household trash at the end of their lifespan. They must be delivered to a collection location for electronic waste, as indicated by the following symbol:



Please contact your local authorities for the appropriate disposal location.

Dear Parents,

Before starting the experiments, read through the instruction manual together with your child and discuss the safety information. Check to make sure the models have been assembled correctly, and assist your child with the experiments. **We hope you and your child have a lot of fun with the experiments!**

FCC Part 15 Statement

This device complies with Part 15 of the FCC Rules. Operation is subject to the following two conditions: (1) this device may not cause harmful interference, and (2) this device must accept any interference received, including interference that may cause undesired operation.

Warning: Changes or modifications not expressly approved by the party responsible for compliance could void the user's authority to operate the equipment.

NOTE: This equipment has been tested and found to comply with the limits for a Class B digital device, pursuant to Part 15 of the FCC Rules. These limits are designed to provide reasonable protection against harmful interference in a residential installation. This equipment generates, uses and can radiate radio frequency energy and, if not installed and used in accordance with the instructions, maybe cause harmful interference to radio communications. However, there is no guarantee that interference will not occur in a particular installation. If this equipment does cause harmful interference to radio or television reception, which can be determined by turning the equipment off and on, the user is encouraged to try to correct the interference by one or more of the following measures:
- Reorient or relocate the receiving antenna.
- Increase the separation between the equipment and receiver.
- Connect the equipment into an outlet on a circuit different form that to which the receiver is connected.
- Consult the dealer or an experienced radio/TV technician for help.

FCC RF Exposure Statement

To comply with the FCC RF exposure compliance requirements, this device and its antenna must not be co-located or operating in conjunction with any other antenna or transmitter.

For body worn operation, this device has been tested and meets FCC RF exposure guidelines when used with an accessory that contains no metal and that positions the device a minimum of 5 mm from the body. Use of other accessories may not ensure compliance with FCC RF exposure guidelines.

Simplified EU Declaration of Conformity
Thames & Kosmos hereby declares that the radio communication unit "Robotics Smart Machines" Bluetooth battery box, model number 7416-W85-G-TK-2, conforms to Directive 2014/53/EU. The complete text of the EU conformity declaration is available at the following Internet address: http://thamesandkosmos.com/roboticssmartmachines/declaration.pdf

GOOD TO KNOW! If you are missing any parts, please contact Thames & Kosmos customer service.
US: techsupport@thamesandkosmos.com
UK: techsupport@thamesandkosmos.co.uk

What's inside your experiment kit:

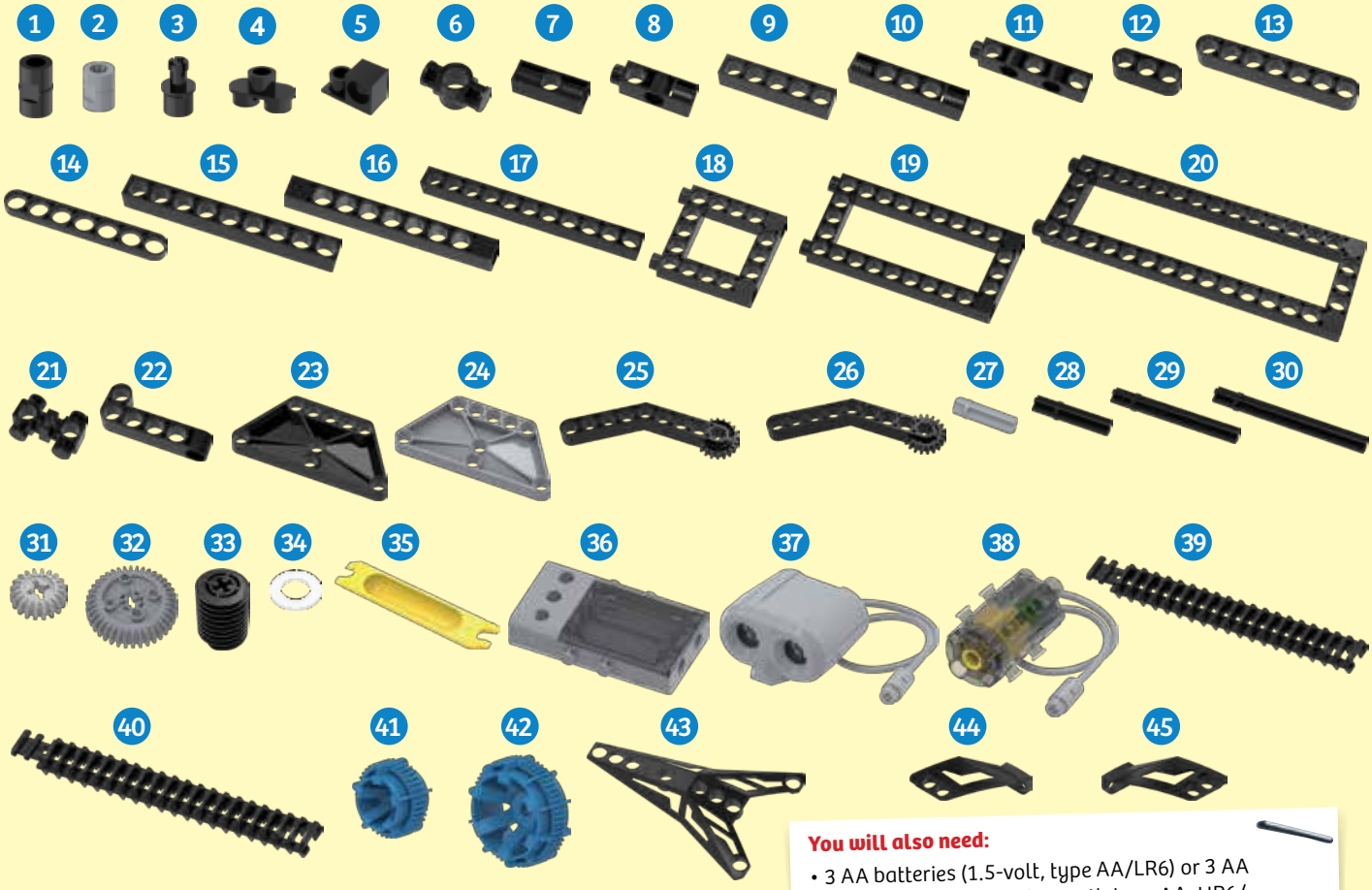

You will also need:

- 3 AA batteries (1.5-volt, type AA/LR6) or 3 AA rechargeable batteries (1.2-volt, type AA, HR6/KR6) and a tablet or smartphone running iOS or Android (see page 7 for hardware requirements)

Checklist: Find – Inspect – Check off

✔	No.	Description	Qty.	Item No.
◯	1	Anchor pin, black	20	7061-W10-C1D
◯	2	Short anchor pin, gray	60	7344-W10-C2S
◯	3	Shaft plug	1	7026-W10-H1D
◯	4	Two-to-one converter	4	7061-W10-G1D
◯	5	90-degree converter X	1	7061-W10-X1D
◯	6	1-hole connector	10	7430-W10-B1D
◯	7	3-hole cross rod	1	7026-W10-X1D
◯	8	3-hole dual rod	2	7413-W10-Y1D
◯	9	5-hole rod	4	7413-W10-K2D
◯	10	5-hole cross rod	2	7413-W10-R1D
◯	11	5-hole dual rod B	2	7413-W10-W1D
◯	12	3-hole wide rounded rod	4	7404-W10-C1D
◯	13	7-hole wide rounded rod	4	7404-W10-C2D
◯	14	7-hole flat rounded rod	4	7404-W10-C3D
◯	15	9-hole rod	2	7407-W10-C1D
◯	16	9-hole cross rod	3	7407-W10-C2D
◯	17	11-hole rod	3	7413-W10-P1D
◯	18	Square frame	2	7413-W10-Q1D
◯	19	Short frame	2	7413-W10-I1D
◯	20	Long frame	2	7413-W10-J1D
◯	21	3-hole bolt rod, black	2	7406-W10-B1D
◯	22	5-hole L rod	2	7406-W10-B2D
◯	23	Trapezoidal plate, black	2	7408-W10-A1D

✔	No.	Description	Qty.	Item No.
◯	24	Trapezoidal plate, gray	2	7408-W10-A1S
◯	25	Crankshaft gear A	1	7411-W10-C1D
◯	26	Crankshaft gear B	1	7411-W10-C2D
◯	27	Motor axle	2	7026-W10-L1S1
◯	28	35-mm axle	4	7413-W10-O1D
◯	29	60-mm axle	2	7413-W10-M1D
◯	30	70-mm axle	2	7061-W10-Q1D
◯	31	Small gear, gray	2	7026-W10-D2S
◯	32	Medium gear, gray	3	7346-W10-C1S
◯	33	Worm gear	2	7344-W10-A1D
◯	34	Washer	6	R12#3620
◯	35	Anchor pin lever	1	7061-W10-B1Y
◯	36	4-channel IR battery box	1	7416-W85-G-TK-2
◯	37	Ultrasonic sensor, gray	1	7416-W85-B-2
◯	38	Planetary gearbox	2	7412-W85-A
◯	39	Belt A	4	7446-W10-C1D
◯	40	Belt B	4	7446-W10-C2D
◯	41	Small wheel frame	2	7446-W10-B1B
◯	42	Large wheel frame	4	7444-W10-A1B
◯	43	Large body piece A	4	7446-W10-A1D
◯	44	Small body piece left	4	7446-W10-A2D
◯	45	Small body piece right	4	7446-W10-A3D

››› TIPS AND TRICKS

Here are a few tips for assembling and using the models. Read them carefully before starting.

A. Pay attention to the hole alignment!

It is very important that you pay close attention to the alignment of the holes in the gear wheels. Make sure that you insert the shaft pins into the correct holes and that the gears are oriented exactly as shown in relation to each other and to the model. Otherwise, the robots will not move properly.

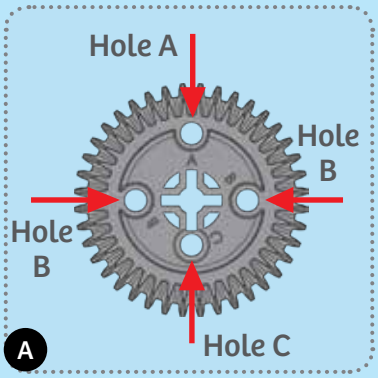

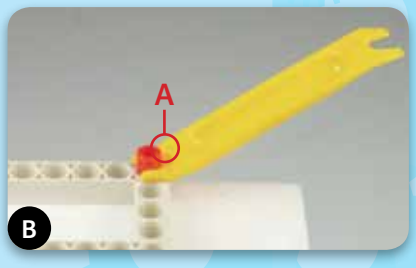

B. The part separator tool

In the box, you will find a little yellow tool called the anchor pin lever. End A of the part separator tool makes it easy to remove anchor pins from the frames.

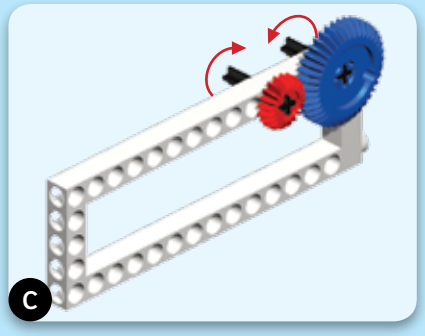

C. Gear wheels

The models will often have several gear wheels installed in a row. In order for the models to work well, these gears will have to mesh well. Otherwise, the force from one gear wheel won't be properly transferred to the next.

D. How to insert batteries into and remove batteries from the Bluetooth battery box

Slide the transparent cover open. Insert or change the batteries according to the indicated plus-minus polarity. Close the compartment by sliding the cover back on.

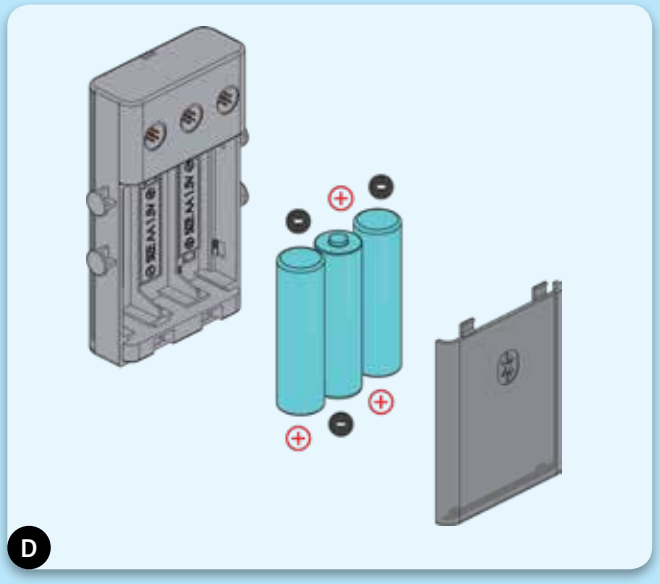

››› TABLE OF CONTENTS

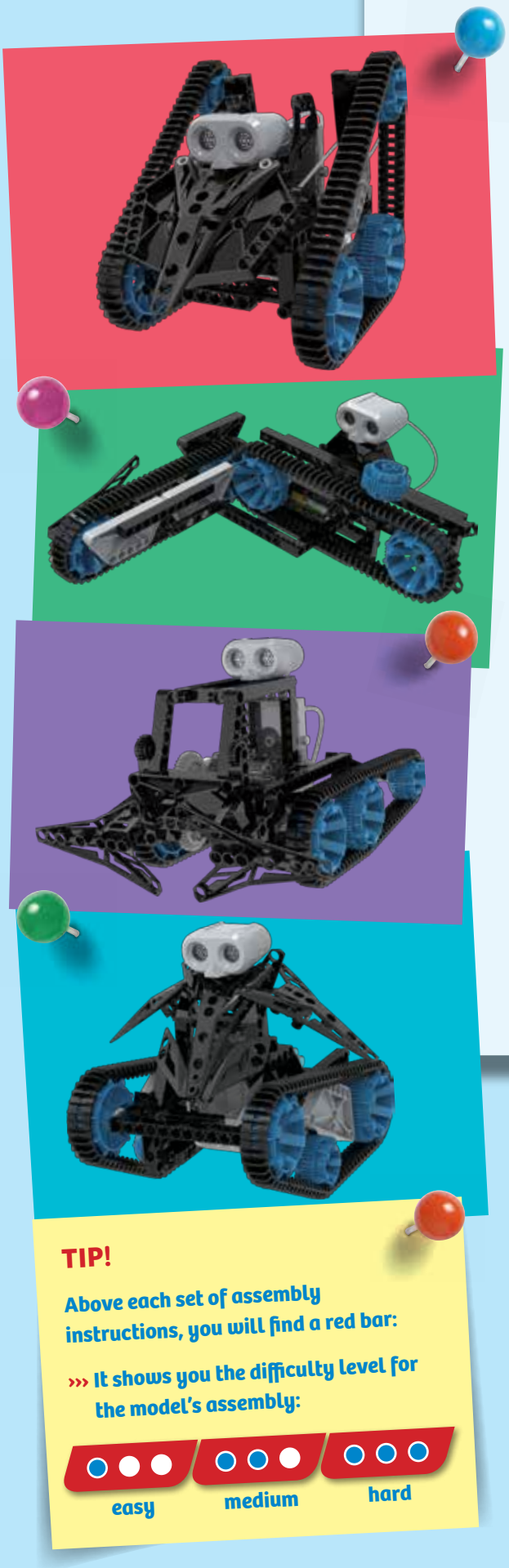

Safety Information ..... Inside front cover

Kit Contents 1
Tips and Tricks 2
Table of Contents 3

Robots: Sensing, Thinking Machines
Getting Started 4
About Ultrasound 5
Downloading and Using the App 6
Writing Programs 7

The Models:
Trackbot 13
Programming the Trackbot 17

Scout Robot 18
Programming the Scout Robot 22

Tracker Bot 23
Programming the Tracker Bot 29

Dozer Bot 30
Programming the Dozer Bot 35

Fire Rescue Robot 36
Programming the Fire Rescue Robot 41

Conveyor Belt 42
Programming the Conveyor Belt 47

Escalator 48
Programming the Escalator 55

Tundra Explorer 56
Programming the Tundra Explorer 60

Publisher's Information ..... Inside back cover

TIP!

Above each set of assembly instructions, you will find a red bar:

››› It shows you the difficulty level for the model's assembly:

DIGITAL ASSEMBLY INSTRUCTIONS

An app with 3D digital assembly instructions is available in addition to this manual. The app will guide you step by step through building each model.

Scan this QR code to open the product web page. Then, tap the link to access the digital assembly instructions app. Available for iOS and Android.

Robots: Sensing, Thinking Machines

Robots are mechanical agents controlled by computer programs. They can be programmed to perform all sorts of tasks and movements. Robots can assemble cars, play soccer, vacuum floors, deliver packages, map terrain, climb mountains, entertain people, cook dinner — the list goes on and on. With this kit, you can build robots that use an ultrasonic sensor to sense their environment. With the app, you can program the robots' motors to behave in different ways depending on the data coming from the ultrasonic sensor. In this way, you can create different robots that perform different tasks!

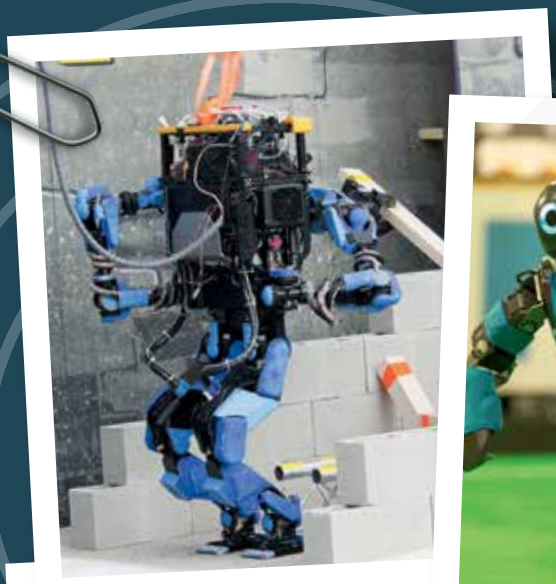

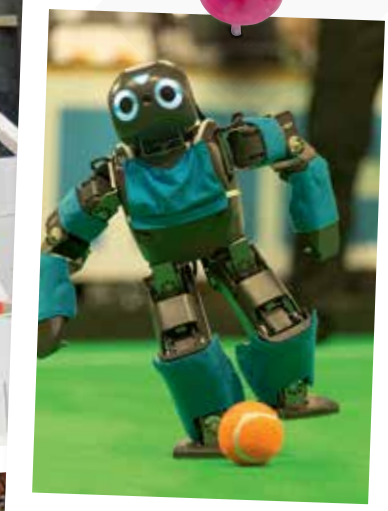







There are four primary types of functional components in this kit that enable the robots to work:

A. The Bluetooth battery box connects to the app on your tablet or smartphone via a wireless Bluetooth connection, and provides power to the motor units via wires.

B. The motor units connect to axles and motor shafts to turn gears and wheels, activating your models. They are powered by the battery box.

C. The ultrasonic sensor sends out ultrasound waves and "listens" for them to bounce off of objects. It gives this information to the app.

D. The app is the "brain" of your robotic models. It uses the feedback from the ultrasonic sensor and program instructions to control the models.

These four elements, in combination with all the mechanical parts — rods, gears, axles, frames, and so on — allow you to build and program mechanical robots that can sense their surrounding using sound waves.

First, follow the assembly instructions starting on page 13 to build one of the models. You can also download an app for iOS or Android devices with digital versions of the assembly instructions for the models in this kit. See page 3 for more information.

Make sure you have inserted the batteries correctly according to the battery information on page 2.

Shake the model until the blue light on the Bluetooth battery box turns on, indicating that the module is on. The module automatically turns off after about a minute of inactivity to save battery power. You simply have to jiggle the model when you want to turn it on again. It's a movement-activated on-off switch!

Now you can connect the tablet or smartphone to the model via the free app. Instructions to download and use the app start on page 7.

A



B



C



D



Robotics

ABOUT ULTRASOUND

Ultrasound is a sound pressure wave that moves through substances (gases, liquids, and solids) and has a frequency higher than that which humans can hear.

Frequency is simply the number of waves in a given period of time. Humans can hear sound waves in the frequency range of 20 hertz (which means cycles per second) to 20,000 hertz (20 kilohertz).

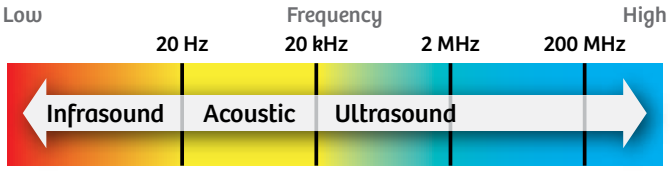

ANIMAL SONAR

In the natural world, bats, whales, and some birds use sound waves to detect objects around them. This is especially useful in the darkness of night or underwater, where seeing visible light is difficult or impossible.

This type of sensing is called **echolocation,** or biosonar. It works like this: The animal emits sound waves that move outward in all directions around it. When the sound waves hit an object, they bounce off of it and travel back to the animal's ears. The sound waves reach each of the animal's two ears at slightly different times. The animal can interpret this time difference to perceive the size, direction of movement, and speed of objects.

Animals use echolocation to hunt prey in the dark of night. They can also use it to navigate and find their way around without normal eyesight.

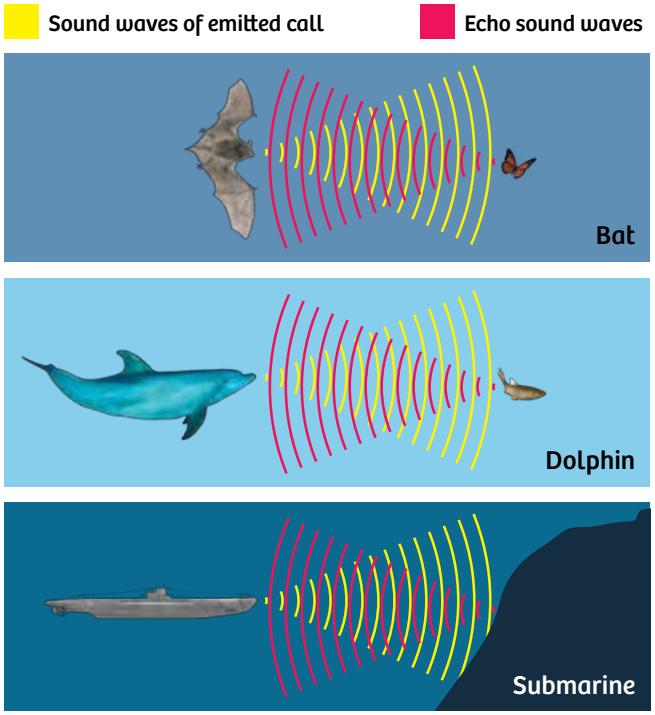

ACTIVE SONAR

Humans have developed a technology to replicate echolocation, which is called **sonar.** Sonar is an acronym for **SO**und **N**avigation **A**nd **R**anging. Sonar is used for navigation in submarines, ships, and airplanes. A similar technology using electromagnetic radio waves instead of sound waves is called **radar** (**RA**dio **D**etection **A**nd **R**anging).

With sonar and radar, airplane pilots are able to find their way and avoid collision with other planes, even in complete darkness or in thick clouds. Police use radar to detect speeding cars.

Your ultrasonic sensor also sends out sound waves. You can't hear them because they are ultrasonic! One "eye" on the sensor head is a transmitter and the other is a receiver. The transmitter sends out ultrasonic waves, like a speaker, and the receiver senses the waves that bounce back, like a microphone. In this way, the sensor is able to sense objects in front of it, even in the dark.

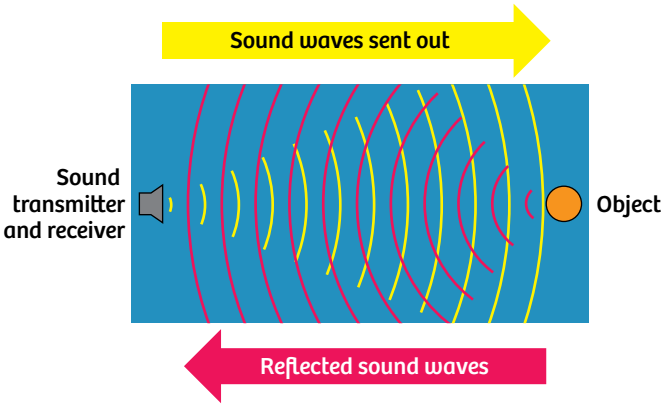

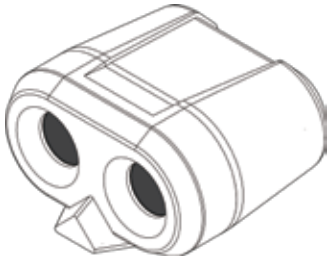

The ultrasonic sensor has one transmitter and one receiver.

DOWNLOADING AND USING THE APP

DOWNLOAD THE PROGRAMMING APP

You can download the free app for iOS devices from the iOS App Store, or for Android devices from Google Play.

- iOS devices must support Bluetooth 4.0 and must be running iOS 8.0 or later.
- Android devices must support Bluetooth 4.0 and must be running Android 4.4 or later.

To get the app:

1. Turn on your tablet or smartphone.
2. If you have a QR code reader installed, you can scan one of the QR codes to right to take you directly to the app download page for your device.
3. Alternatively, you can search for the "Robotics: Smart Machines" app or follow one of these links to the product page:
   iOS: www.thamesandkosmos.com/apps/620375/ios
   Android: www.thamesandkosmos.com/apps/620375/android
   Then, scroll to the bottom to find links to the app.
4. Follow the steps on the app download page to download and install the app on your device.
5. Open the app and the remote control screen will appear.



Robotics

iOS app

Android app

REMOTE CONTROL MODE

1. Connect the app to your model by pressing the Bluetooth button in the upper left corner (A).
2. When the connection has been made, the Bluetooth symbol will change color (B) and, if a motor is connected, the motor will drive for a second to indicate the connection has been made.
3. The ultrasonic functionality will now be available if the ultrasonic sensor is connected properly. The concentric circular rings indicate the relative distance to an object in front of the sensor. The ring lights up when an object is detected. Closer objects light up the inner rings; objects that are farther away light up the outer rings. Test it out by moving an object in front of the sensor.
5. You can use the two slider controls (C) to directly control the two motors on your models. Slide the slider up or down with your finger to make the motor spin clockwise or counterclockwise.

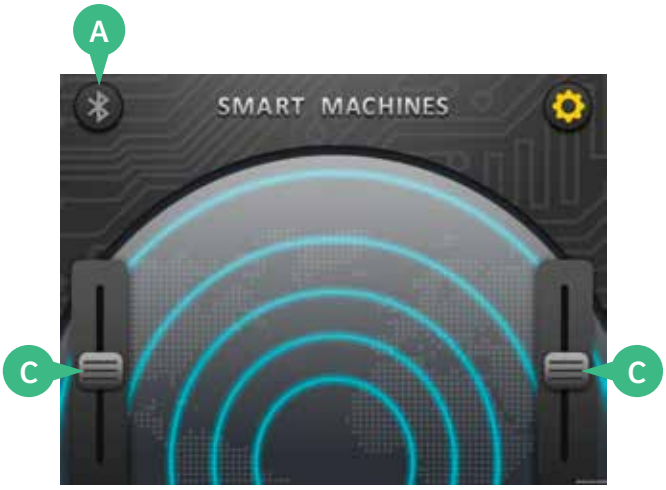



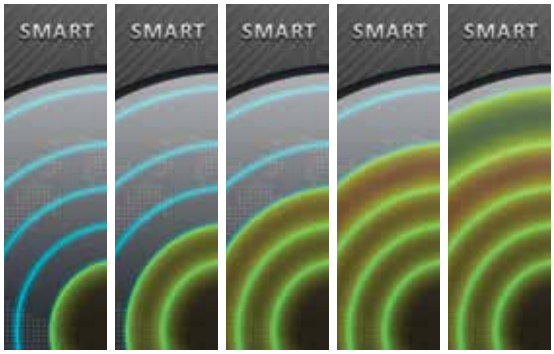

Object Near

Object Far

PROGRAMMING MODE

Press the gear icon (D) to enter the programming mode. When you press the icon, a list of programs appears. You can save up to 24 programs. The app comes with demo programs preloaded in Programs 1-24. **You will be using programs 17-24 in this kit.**

UNDERSTANDING THE ULTRASONIC DETECTION INTERVALS

1. Enter Program 8, which is a blank program. The programming screen appears.
2. The Go button (E) runs the program. When it is pressed, the number in the upper left (F) will start indicating the distance to the object that the sensor is detecting.
3. After you press the Go button, it becomes a Stop button (G) and the program runs. You can see in this example that the sensor is reading a distance of "21." This equates roughly to a distance of 21 centimeters. Press the Stop button.
4. The sensor distance indicator line (H) has adjustable ranges. Different program segments can run in each of these ranges. By default, there are three ranges. The first range marker (I) is set at 30 and the second marker (J) at 50. This means there are four program segments by default:

- The "Opening" program segment (K) runs once at the beginning when the Go button is pressed.
- When an object is detected between 0 and 30, the blue 0-30 segment (L) runs.
- When an object is detected between 30 and 50, the green 31-50 segment (M) runs.
- When an object is detected between 50 and 100, the purple >51 segment (N) runs.

You can slide the range markers to change the distance ranges. You can also increase the number of distance range segments by pressing the add range marker button (O). You can delete a segment with the delete button (P).

Range markers must be a minimum of 5 distance units apart. You cannot add a new range marker if there is another marker at 90 or higher.

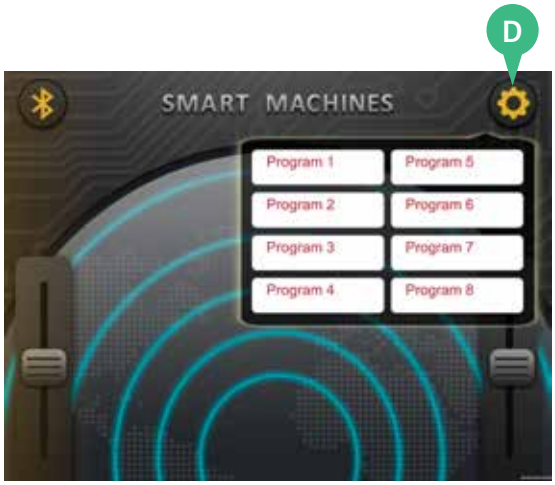

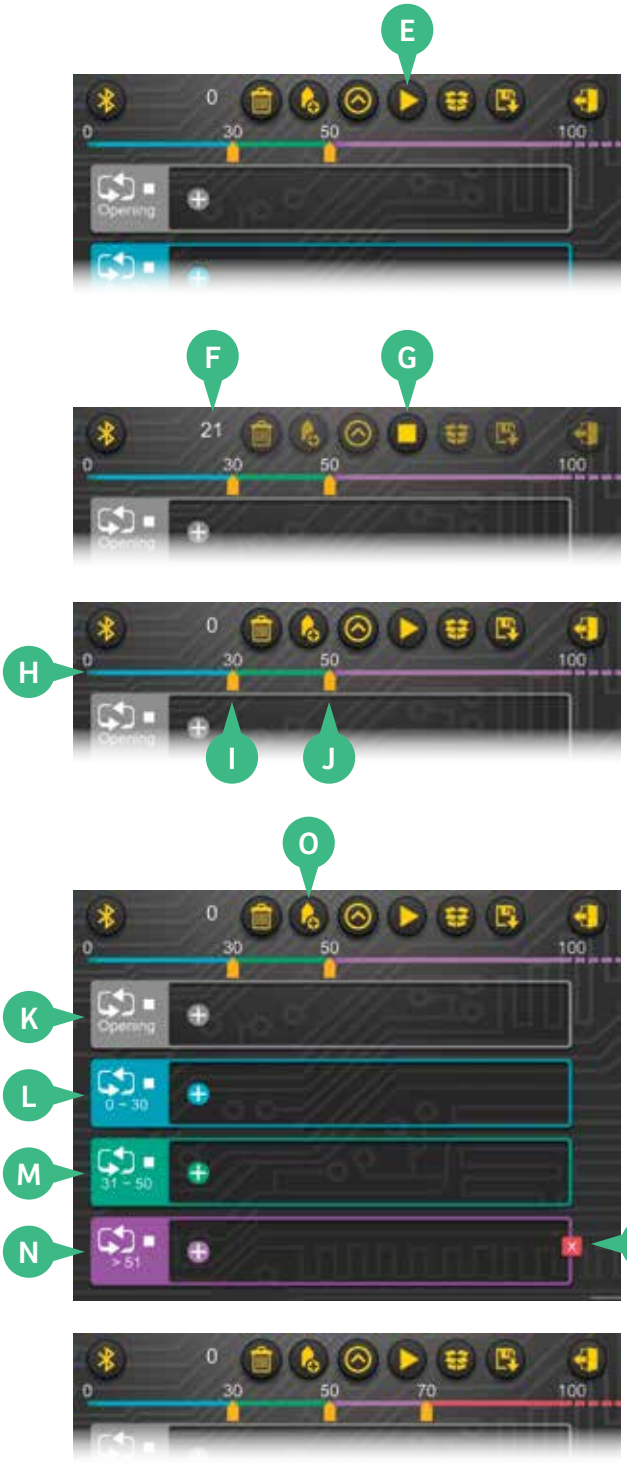

WRITING A PROGRAM

1. Now you are ready to write your first program. Click the gear button (A) to enter the programming mode. Choose a blank program (Program 8 starts out blank).
2. The programming screen appears.
3. Press the plus sign "+" button (B) in one of the program segments to add a command.
4. The commands menu (C) pops up. You can select between three types of commands:

   • Choose Motors to add motor commands.

   • Choose Notes to add sound commands.

   • Choose Rest to add a pause command.

   Or press the red X button to exit the commands menu.

Continued on next page >>>

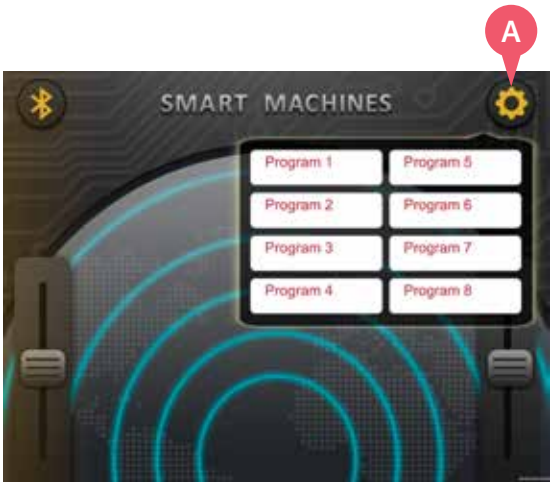

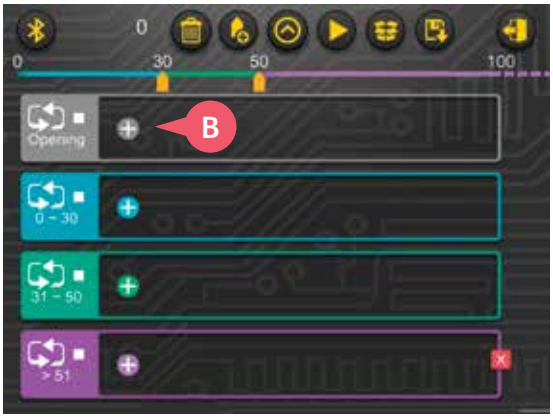



TROUBLESHOOTING THE SENSOR CONNECTION

If the sensor connection isn't working:

››› Disconnect and then reestablish the Bluetooth connection.

››› Make sure the sensor cable is securely plugged into the battery box.

››› Exit the program you are in and relaunch it.

PROGRAMMING MOTORS

1. Press the motors command icon and the motor programming window appears (D).

2. In the motor programming window, you can create a command to control motor one (blue) and/or motor two (red) to turn forward or backward. You can choose a relative speed from -4 (fastest in one direction) to 4 (fastest in the other direction).

Note: A positive speed (1-4) in the motor command doesn't always mean your model will move forward! You will have to test which direction results in the desired output direction on your specific models, because the orientation of the motor and the gearing will change the direction.

3. With the time slider (E), you can also set the duration for which the motor(s) will turn, from 0.5 to 5.0 seconds.

4. When you are satisfied with your selections, press the green check mark button and the motor block (F) appears in the program segment.

   The blocks show which motor(s) (G) the command will turn, and at what speed and in what direction (H) each motor will turn. Below that, it shows how long the motor(s) will turn (I).

   The blue gear wheel represents motor one and the red gear wheel represents motor two.

Tip! Add red and blue dots or stickers to the battery box and motors so you can easily keep track of which motor you are programming.

5. You can add more command blocks to the same segment by pressing the "+" button (B) again.

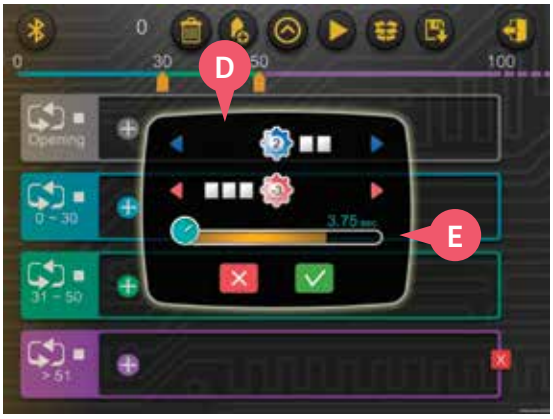

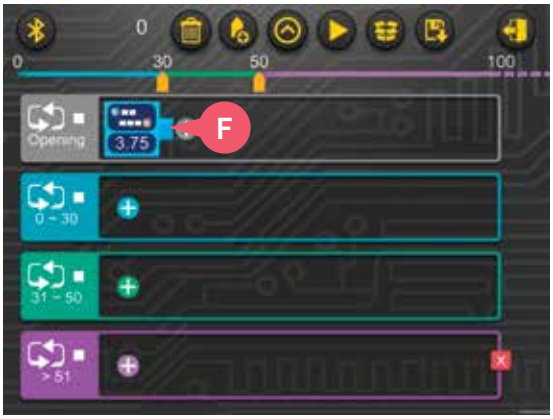

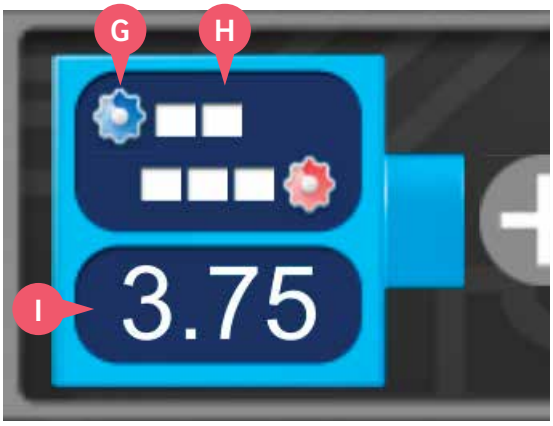



Motor indicator dots

PROGRAMMING SOUNDS

1. Press the notes command icon and the sound programming window appears (J).
2. In the sound programming window, you can create a command to make sounds. You can choose the pitch (Do, Re, Mi, Fa, Sol, La, Si, and Do) and the duration (0.5 to 5 seconds) for each note command.
3. Press the green check mark button and the note block (K) appears in the program segment.

   In this way, you can program a simple melody with multiple note blocks that will play when the program segment runs.



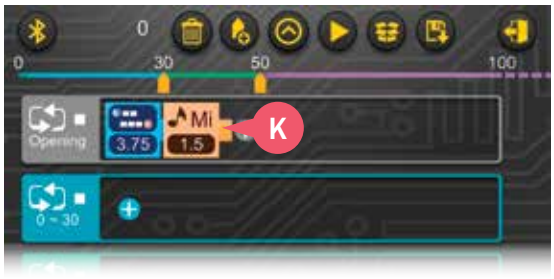

PROGRAMMING PAUSES

1. The last command option is to add a pause, or rest, to the program. Press the rest command icon and the rest programming window appears (L). You can choose the duration (0.5 to 5 seconds) of the pause in the program. Press the green check mark button and the rest block (M) is added to the program segment.



WRITING A COMPLETE PROGRAM

Following the previous instructions for adding commands, you can now go and write programs for all of the segments. You can think of the different actions you want your robot to perform when the ultrasonic sensor reads objects at different distances in front of it.

Don't be afraid to try a lot of different ideas and play around with different combinations of command blocks in different distance range segments.



DELETING COMMANDS

To delete a command block, press the block you want to delete to open its programming window. Then press the trash button (N) in the bottom corner.



DELETE ALL

To clear an entire program and set it back to the default blank program mode, press the trash can button (O) in the menu bar. This also resets the range markers to the default settings.

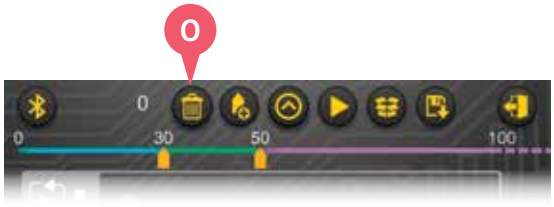

LOOP CHECKBOX

When the loop checkbox (P) is checked, the program segment will run in a continuous loop, over and over again, when the program segment is active.

When the loop checkbox is unchecked, the program segment will run just once when the program segment is triggered.



SWITCHING BETWEEN PROGRAMS

If you want to move to a different program, click the storage box button (Q) and select which program you want to open.



SAVING PROGRAMS

When you want to save a program you have written, press the disk button (R). The program script will immediately be saved inside the program you are currently in. A confirmation screen will appear.

REVERT TO SAVED

To revert to the last saved version of the program and erase all unsaved changes, press the revert to saved button (S).



EXITING PROGRAMMING MODE

When you want to leave the programming screen, press the door button (T). A window will pop up asking if you are sure you want to leave the programming screen. Press the green check mark button to go back to the main remote screen.



TRACKBOT

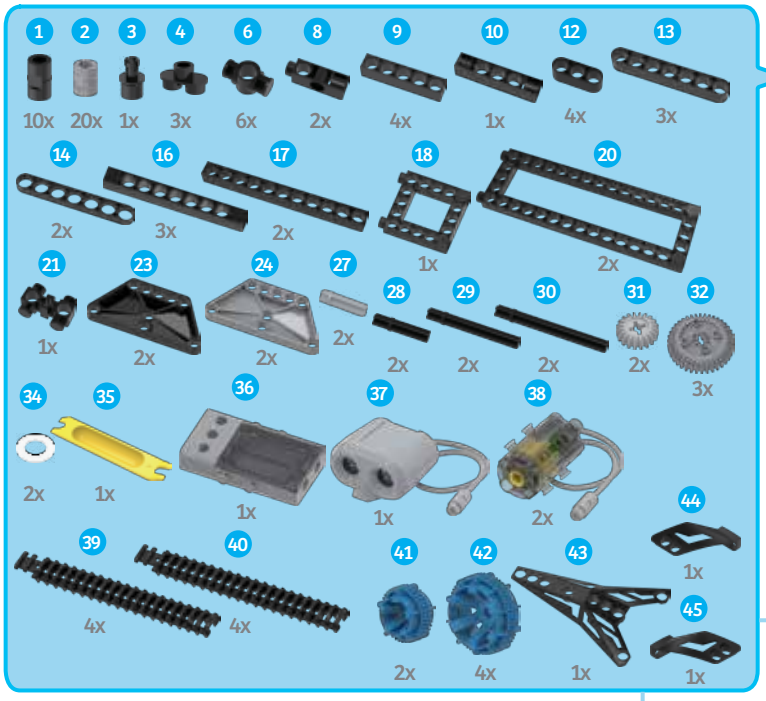

DIGITAL ASSEMBLY INSTRUCTIONS

Scan this QR code to open the product web page. Then, tap the link to access the digital assembly instructions app.

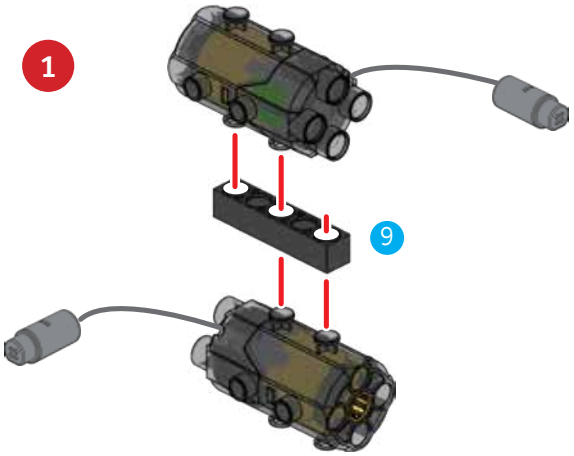

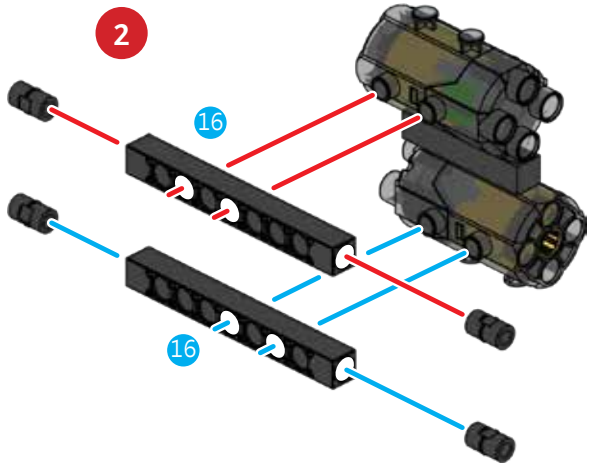

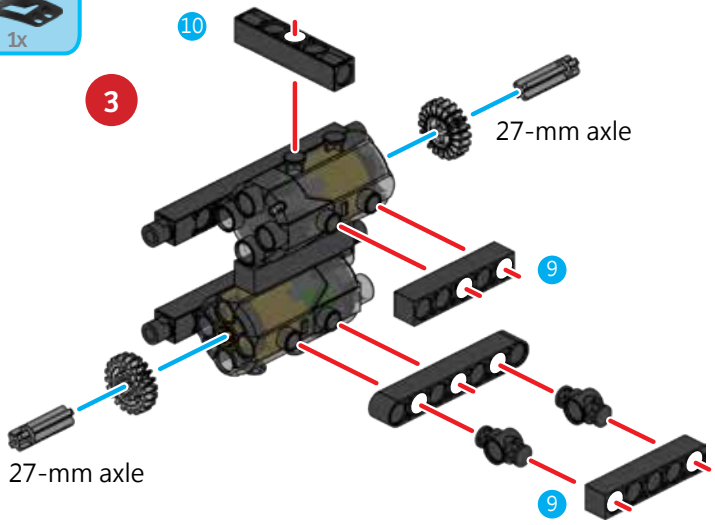

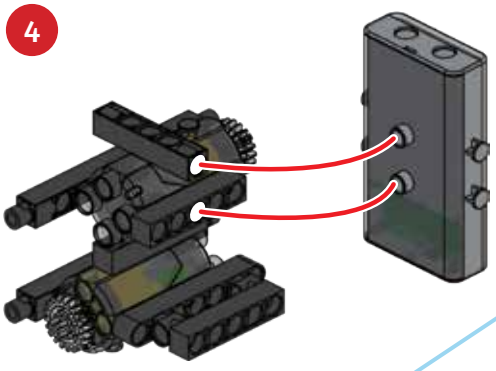

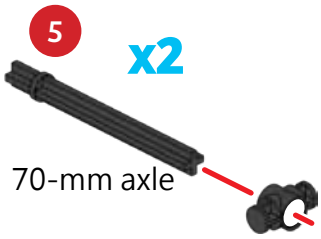

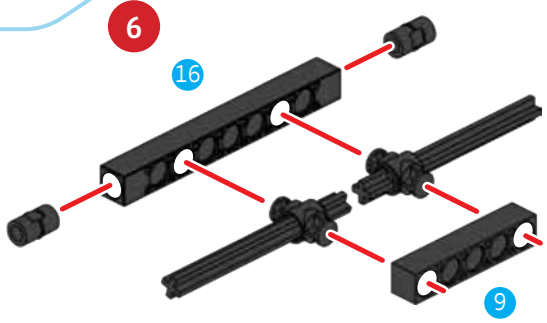

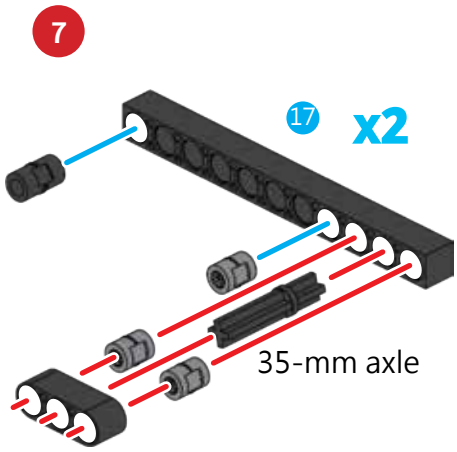

8

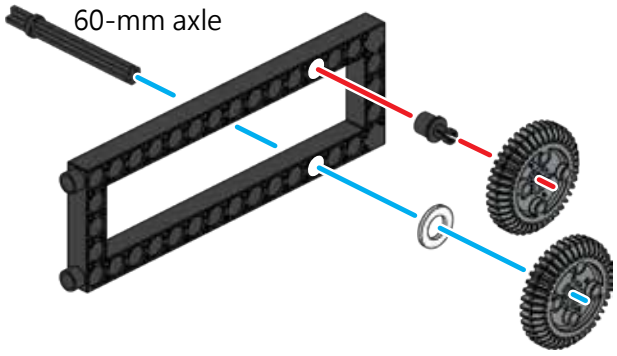

9

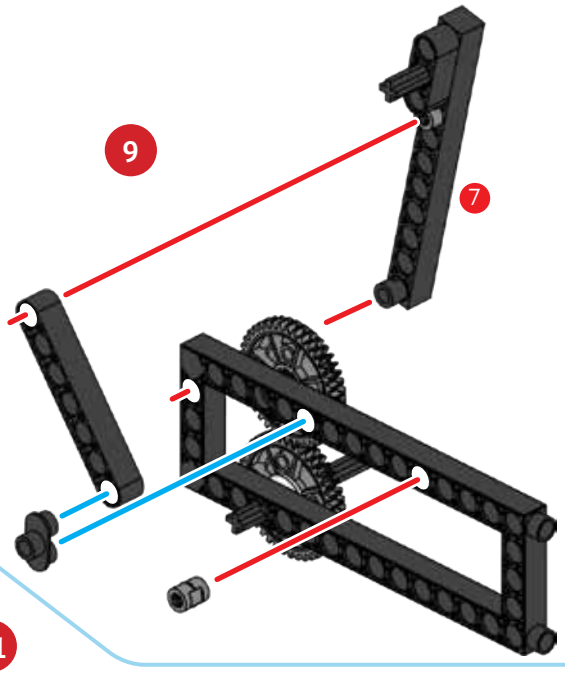

10

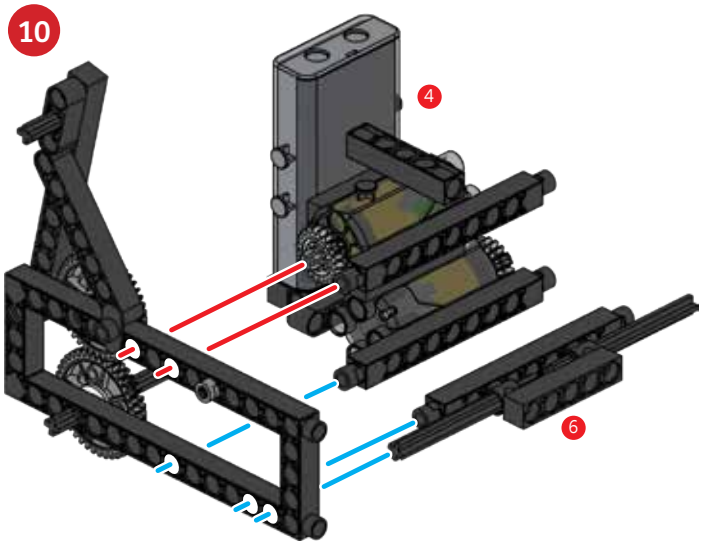

11

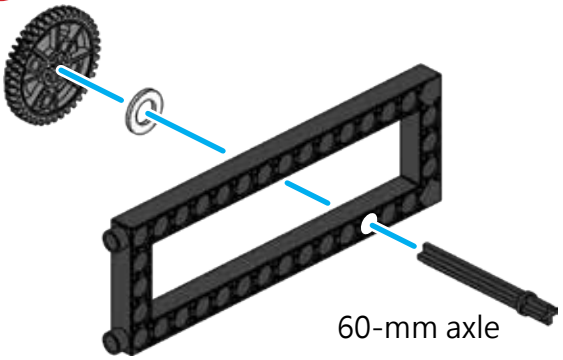

12

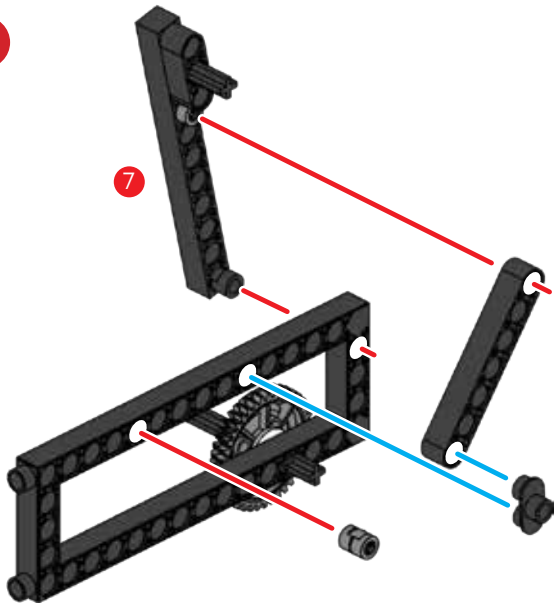

13

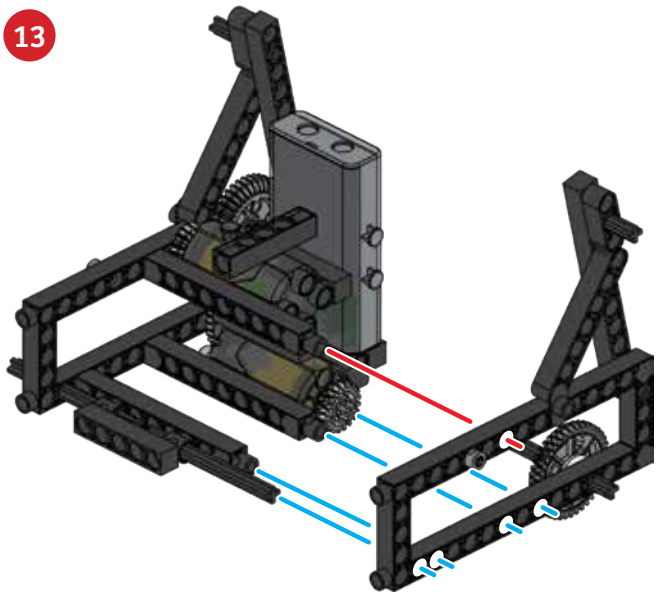

14

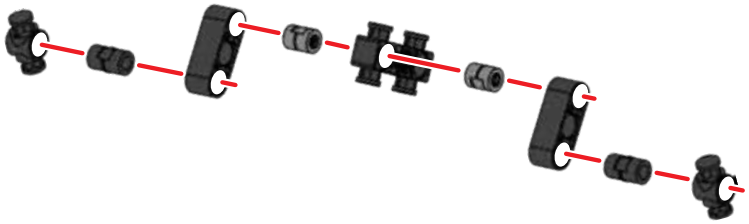

15

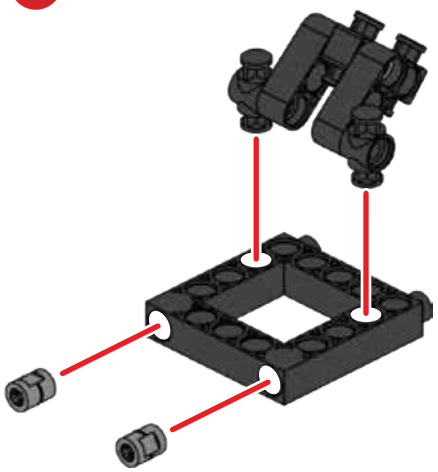

16

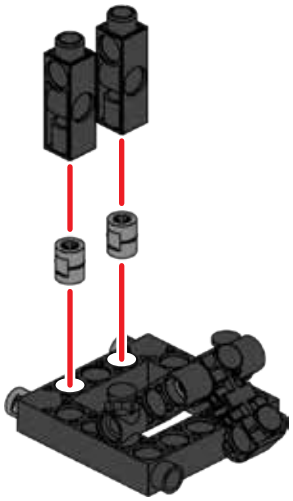

17

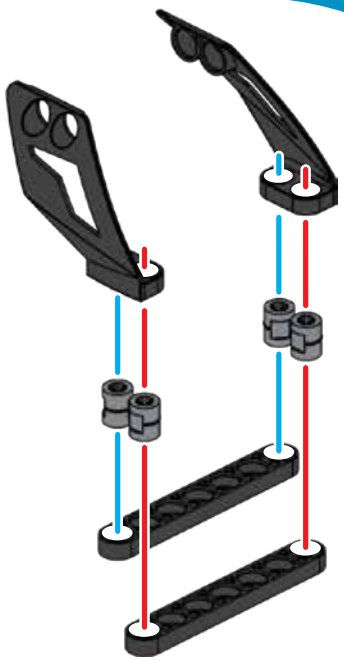

18

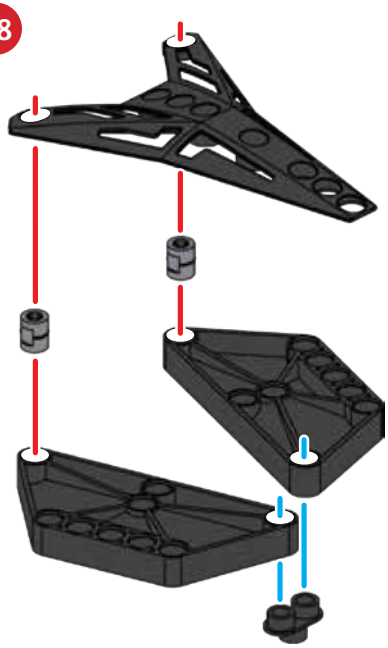

19

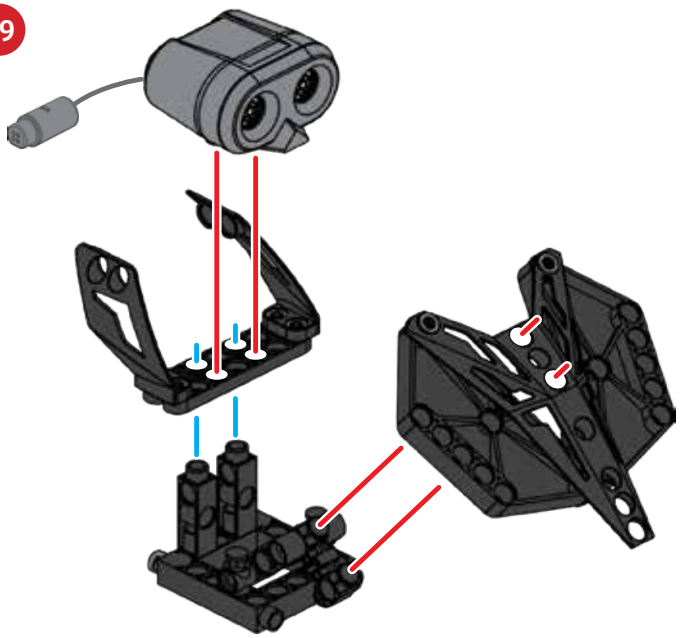

20

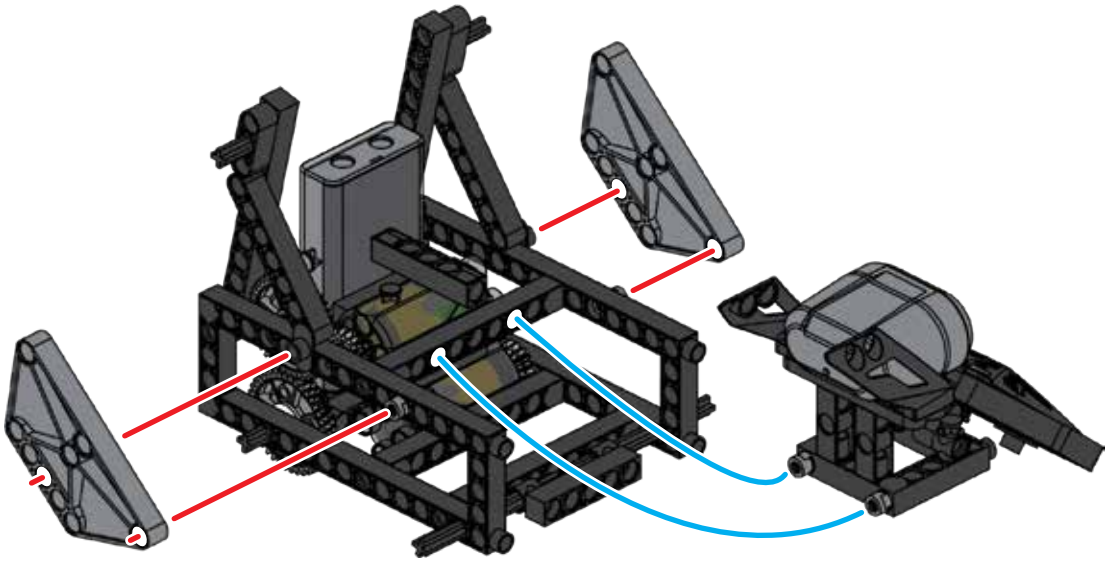

21





How to assemble tracks:

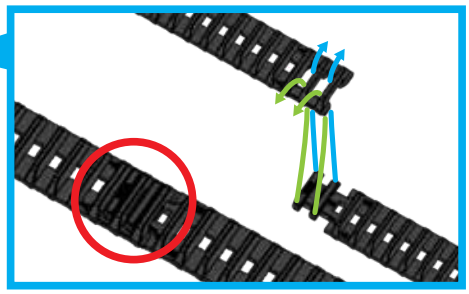

22

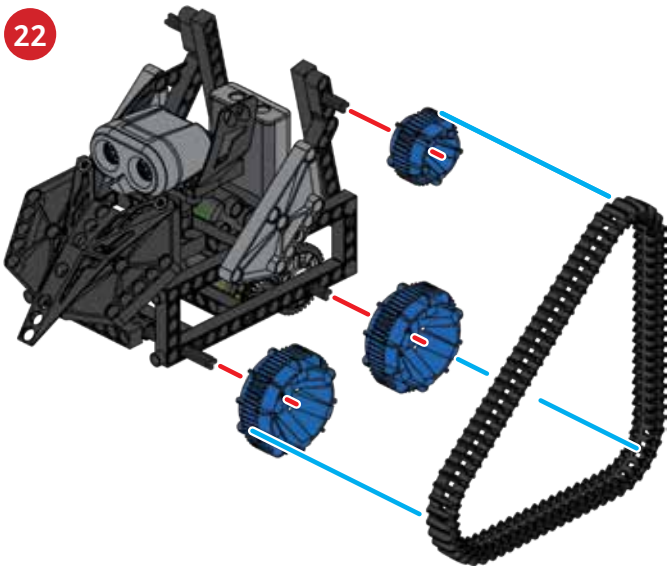

23

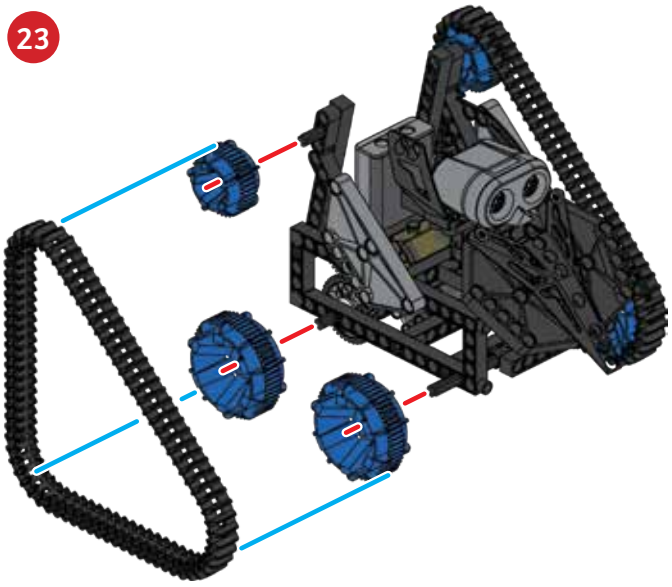

24

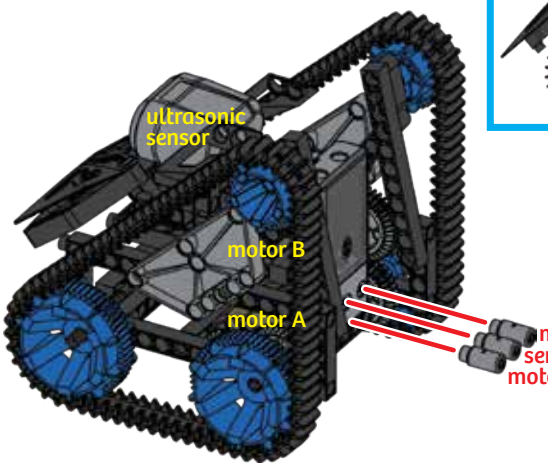

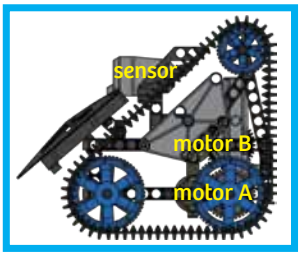

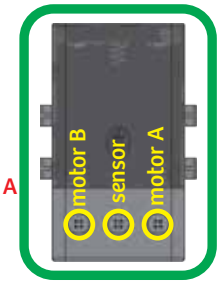

25

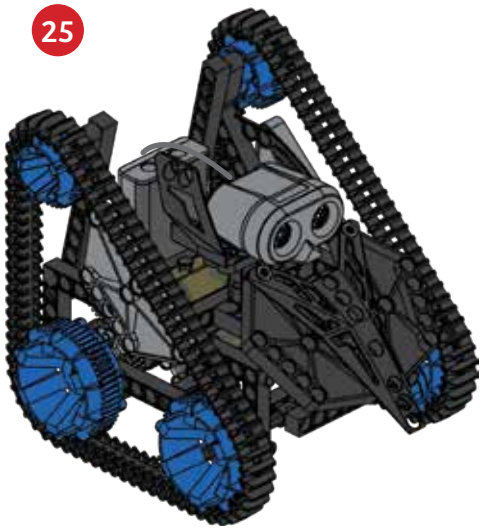

Done!

PROGRAMMING

SAMPLE PROGRAM FOR THE TRACKBOT

The trackbot is very shy! It will quickly move to avoid any object that is in front of it. When this program runs, the robot will first play music. If you move an object, such as a book, in front of the trackbot's ultrasonic sensor it will quickly back away and then turn. Repeat this several times to see how the trackbot reacts.

This program is preloaded in the app under Program 17. Test it out and write down how the robot behaves for each program segment below.

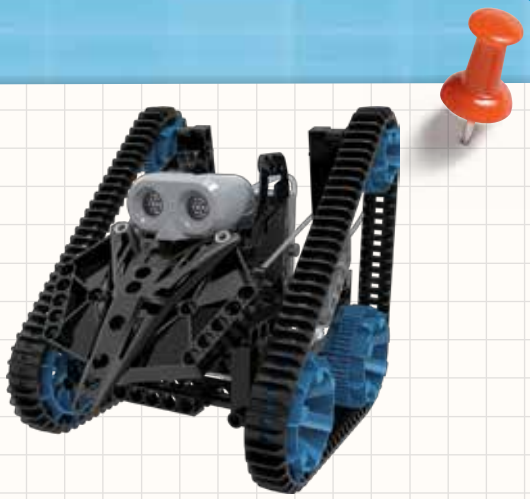



PROGRAMMING NOTES

DEMO PROGRAM:

Program 17

OPENING SEGMENT:

SEGMENT 0-30:

SEGMENT >31:

SCOUT ROBOT

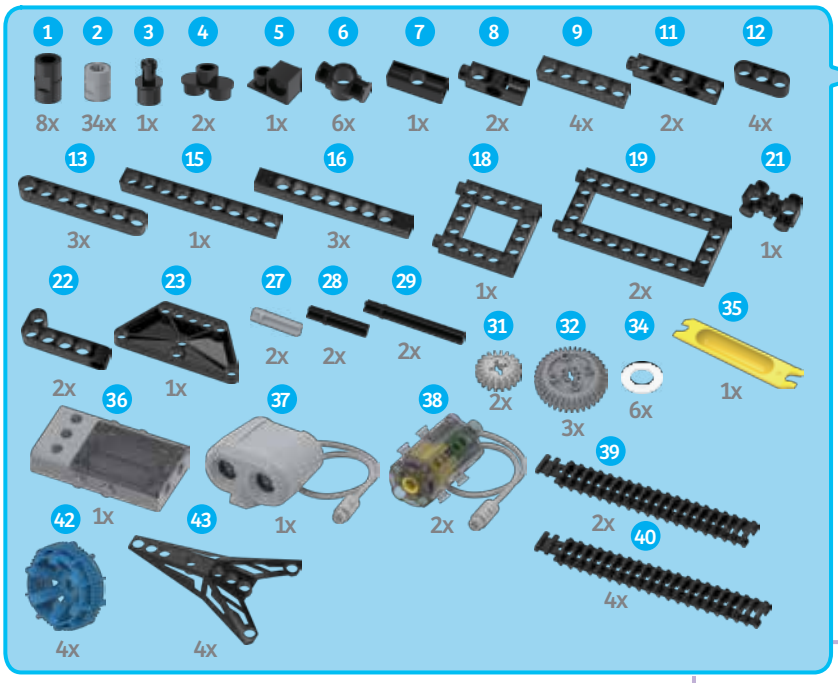

DIGITAL ASSEMBLY INSTRUCTIONS

Scan this QR code to open the product web page. Then, tap the link to access the digital assembly instructions app.

1

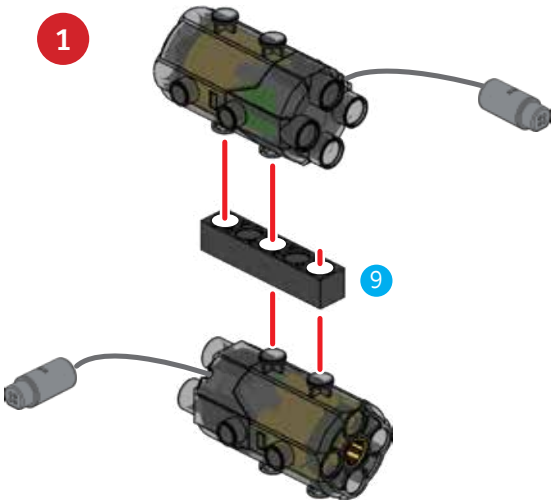

2

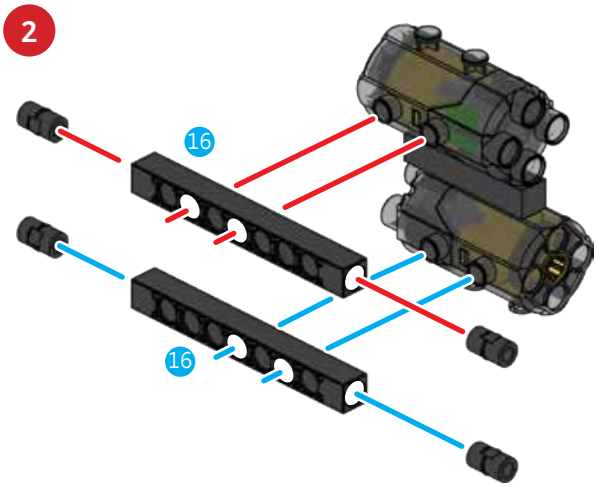

3

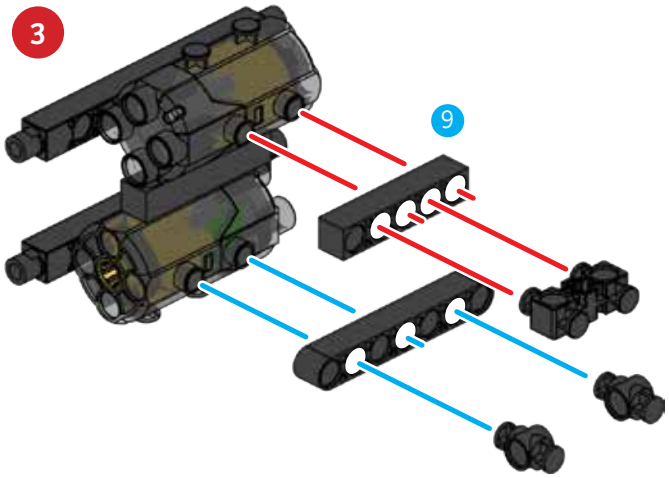

4

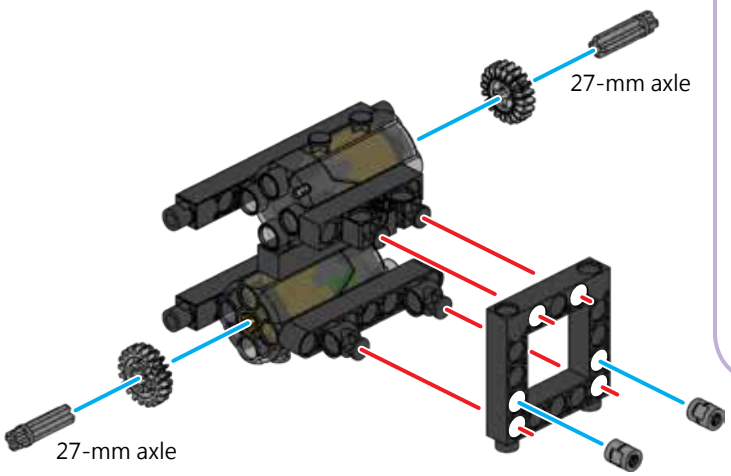

5

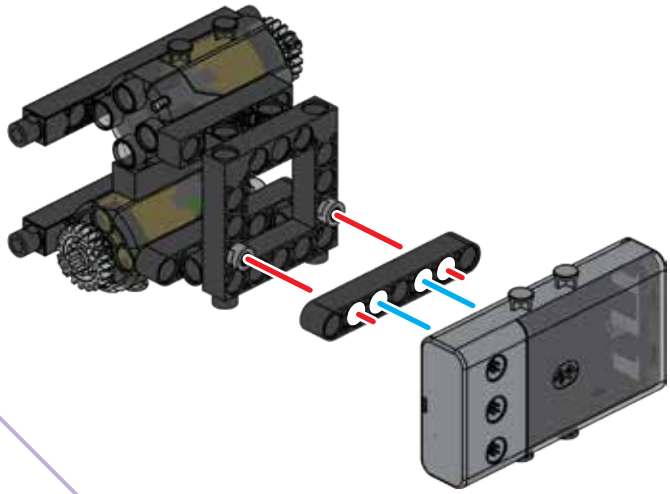

6

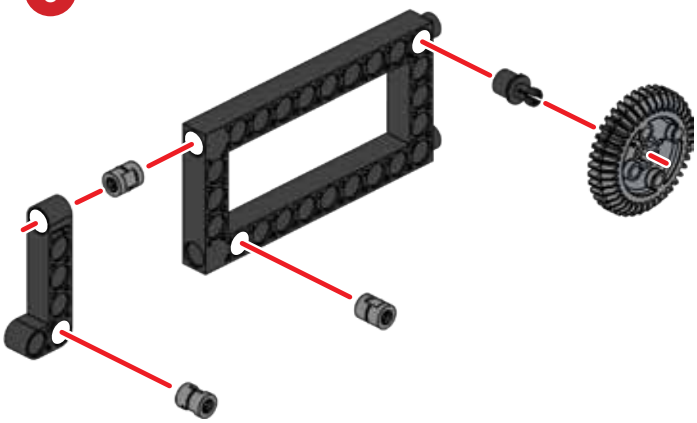

7

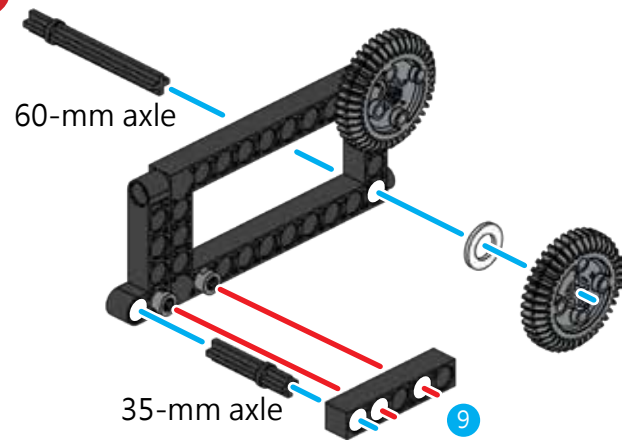

8

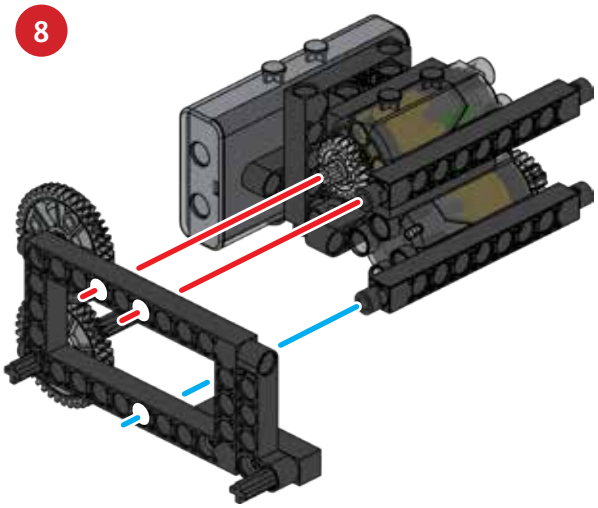

9

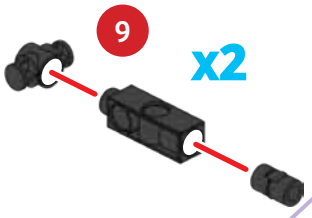

10

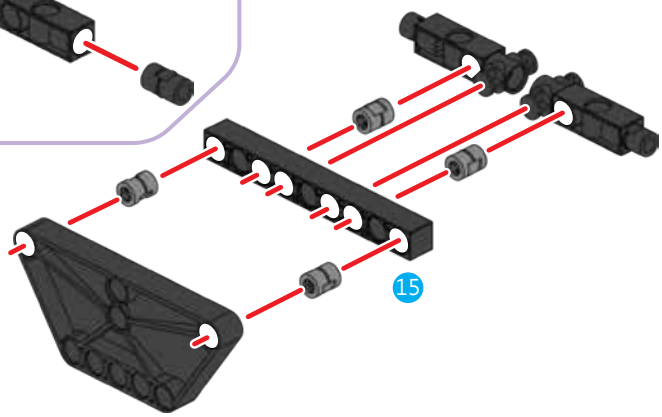

11

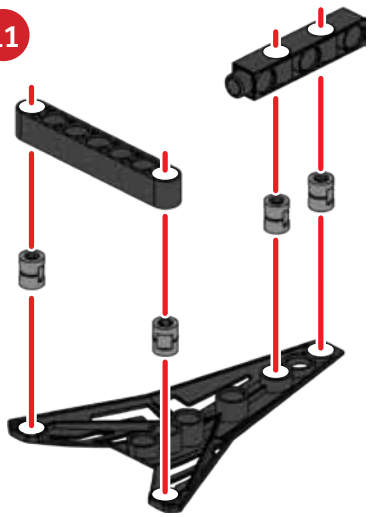

12

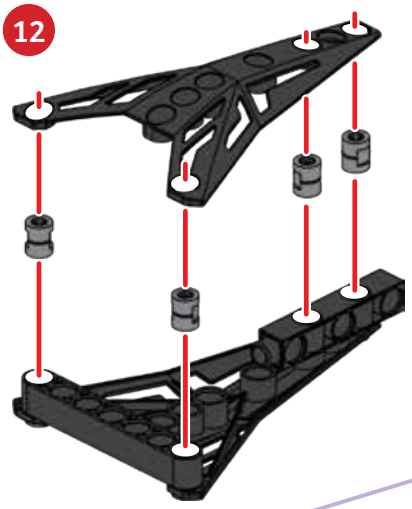

13

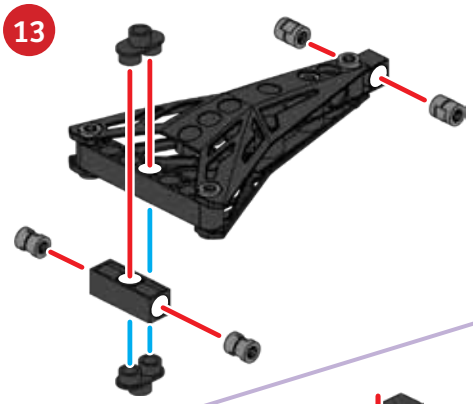

14

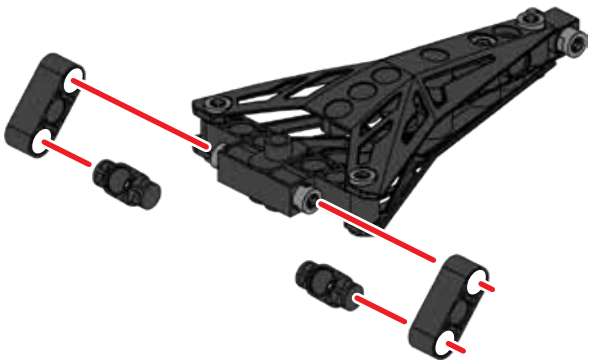

15

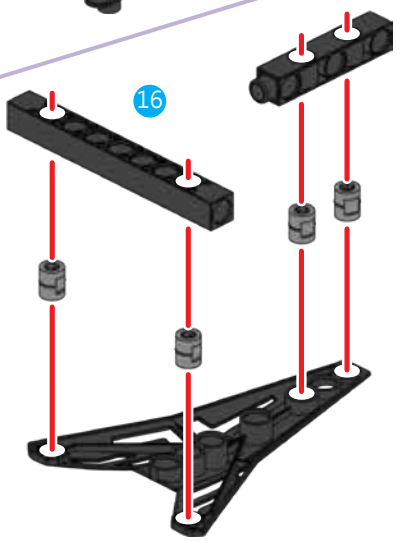

16

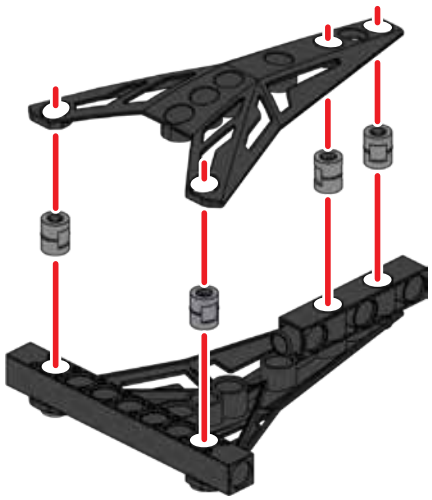

17

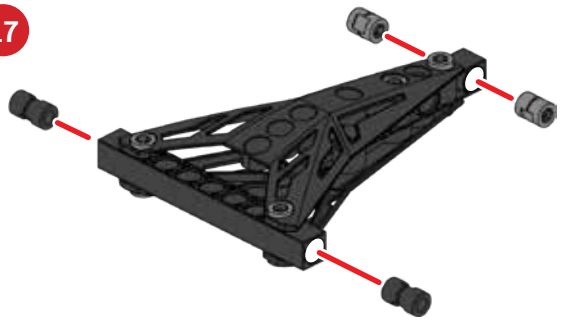

18

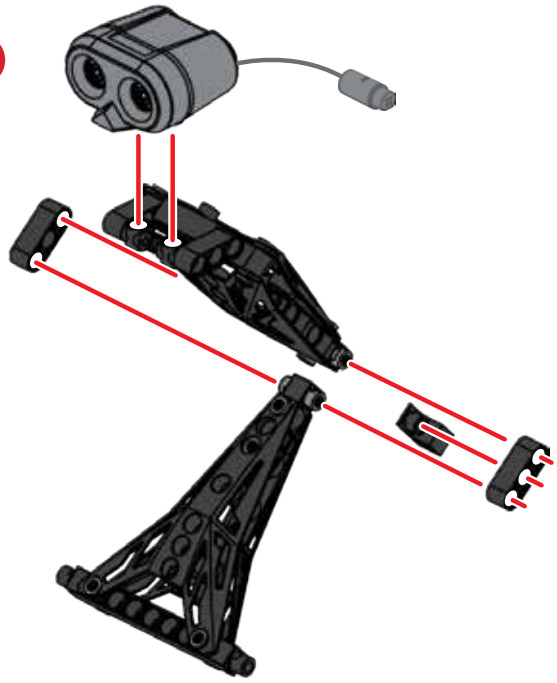

19

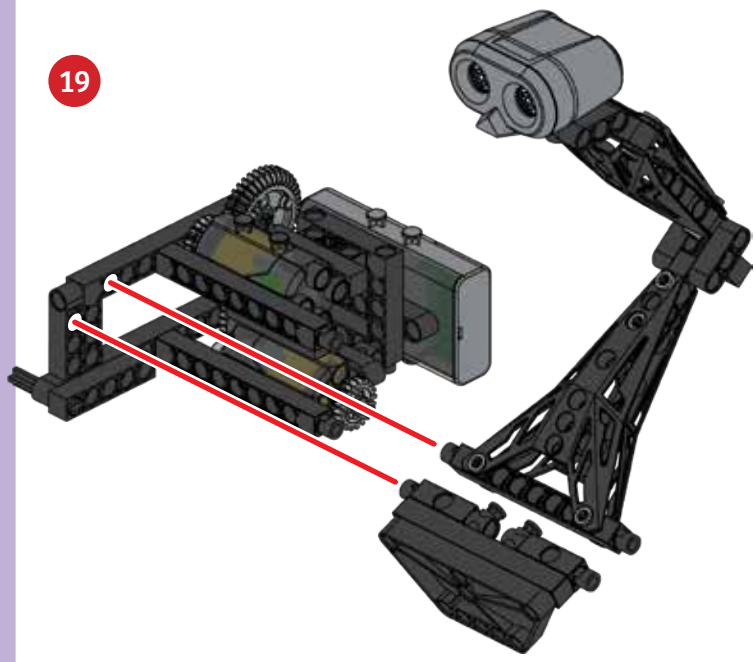

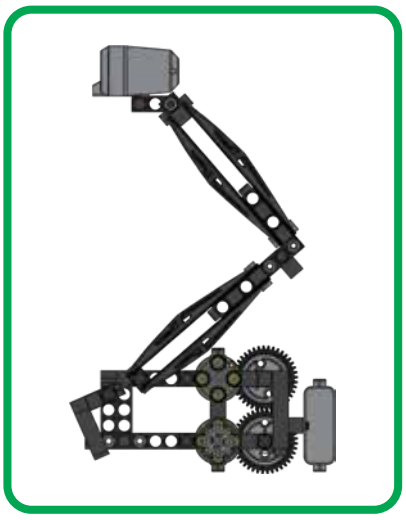

20

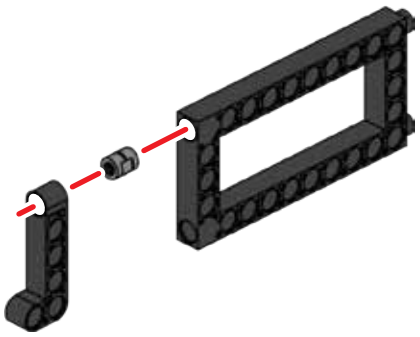

21

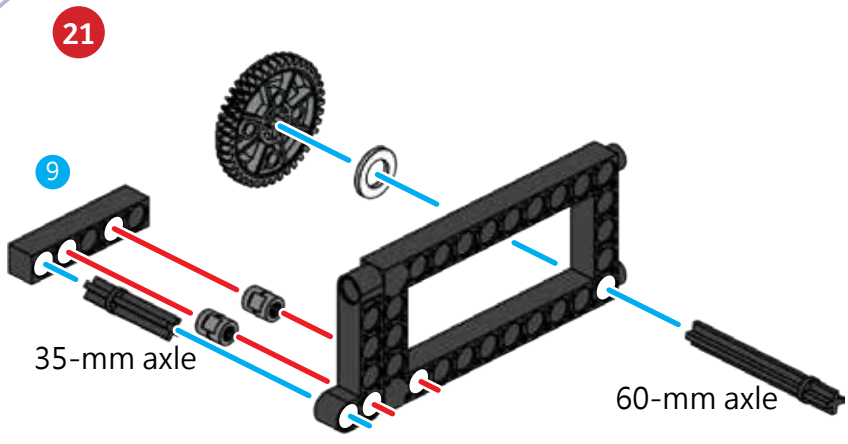

22

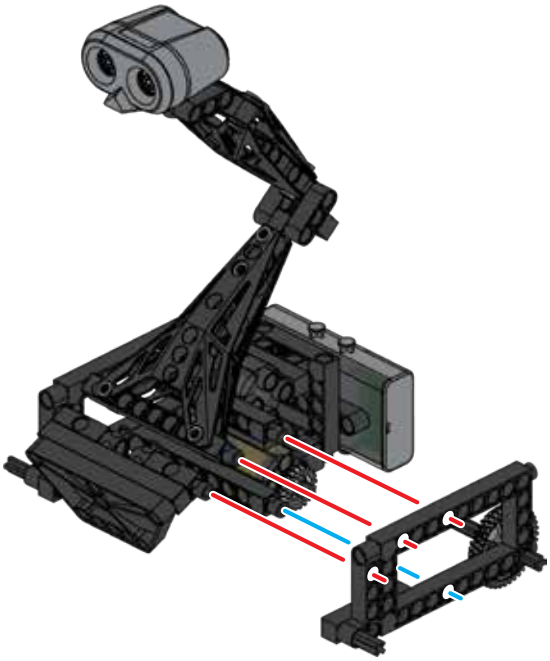

23

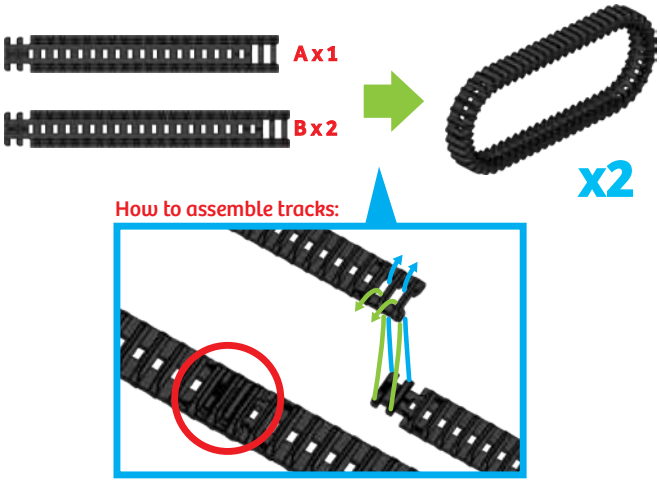

24



25



26

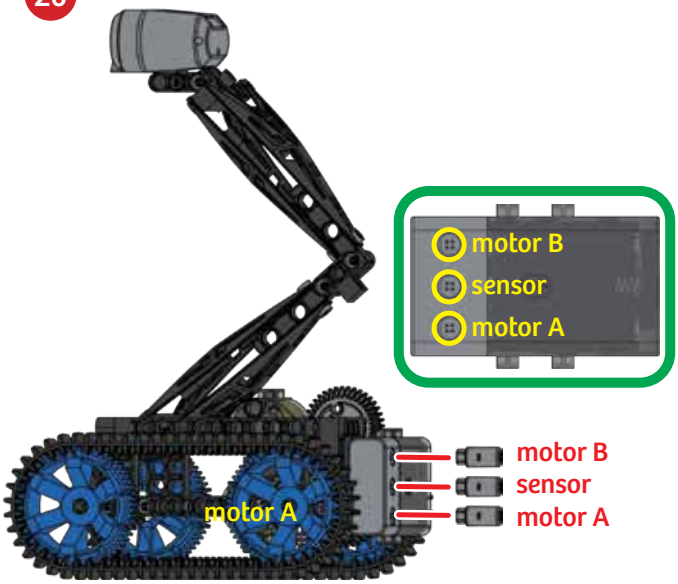

27



Done!

SAMPLE PROGRAM FOR THE SCOUT ROBOT

First, place several large objects along a corridor or hallway. When you run this program, the scout robot will be able to navigate around these obstacles. First, the scout robot will move forward until an object is detected by the ultrasonic sensor. When an object is within range of the scout robot, it will back away and turn. Then the scout robot will continue to move forward again in a new direction until it detects another object.

This program is preloaded in the app under Program 18. Test out the program and write down how the robot behaves for each program segment below.



PROGRAMMING NOTES

DEMO PROGRAM:

Program 18

OPENING SEGMENT:

SEGMENT 0-40:

SEGMENT >41:



TRACKER BOT

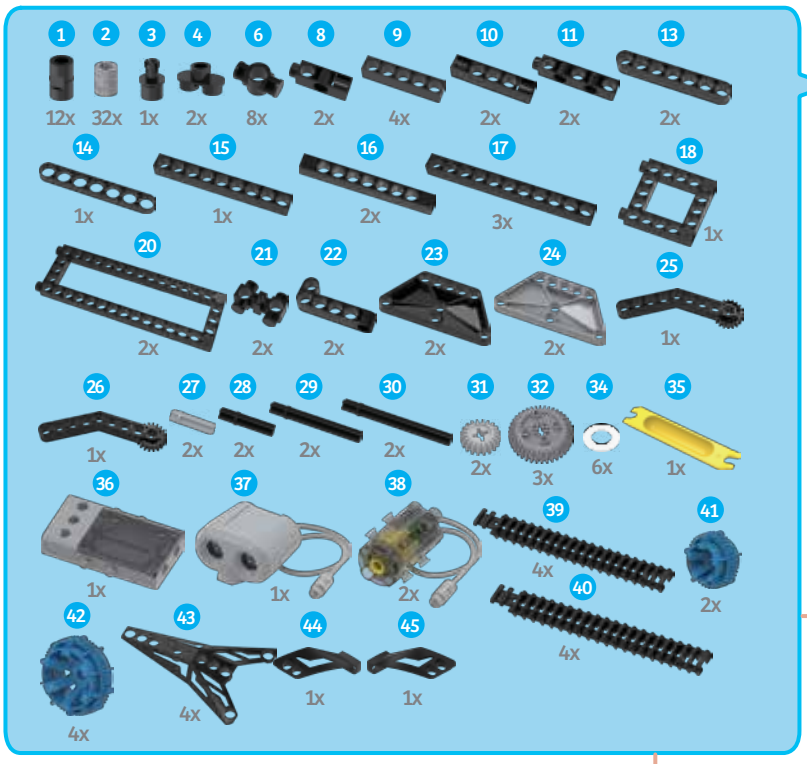

DIGITAL ASSEMBLY INSTRUCTIONS

Scan this QR code to open the product web page. Then, tap the link to access the digital assembly instructions app.

1

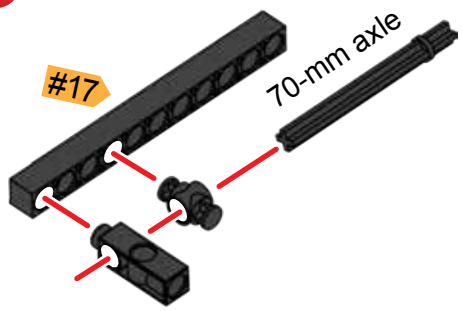

2

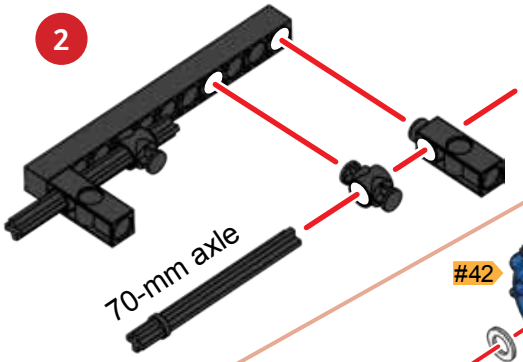

3

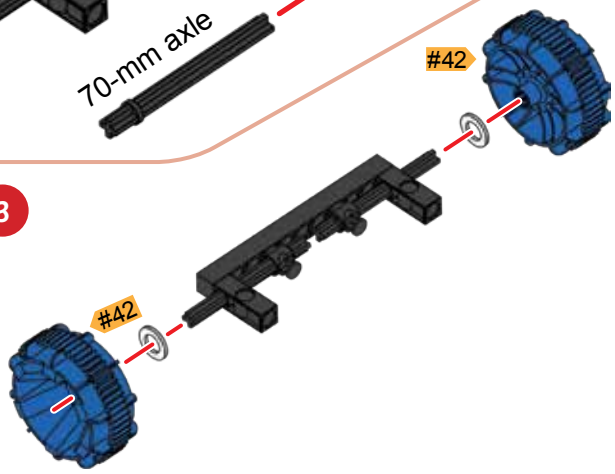

4

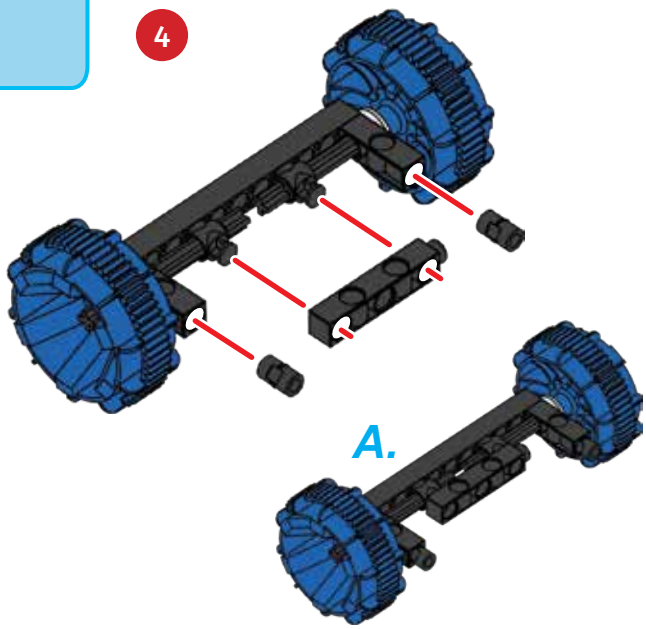

5

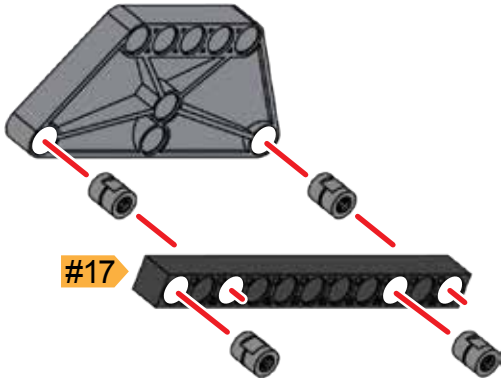

6

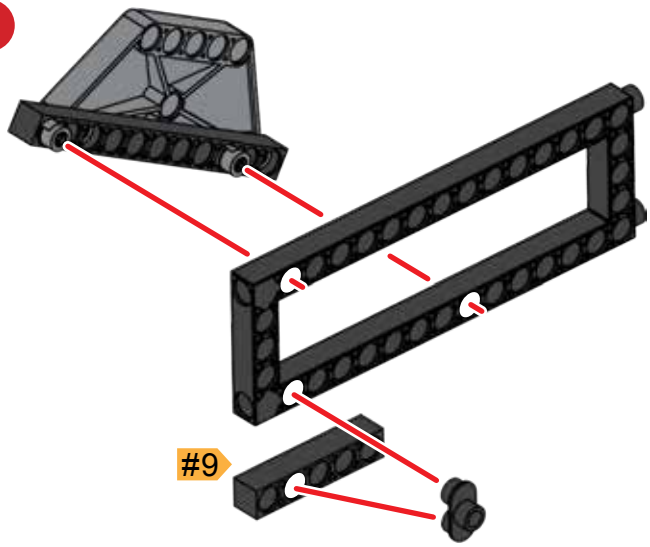

7

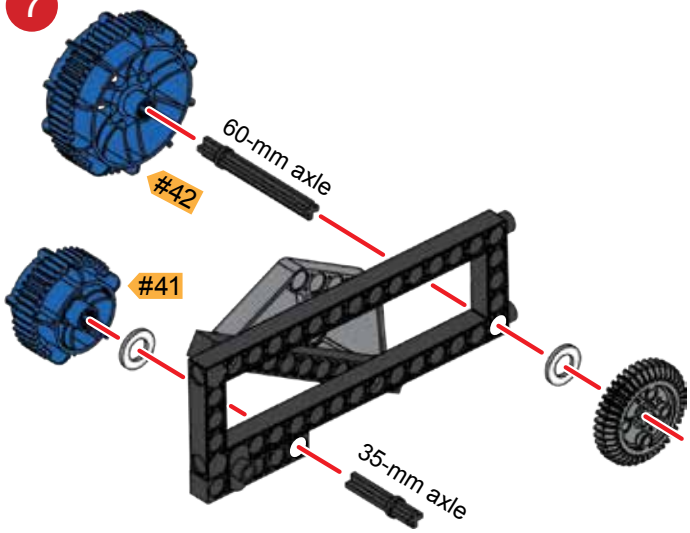

8

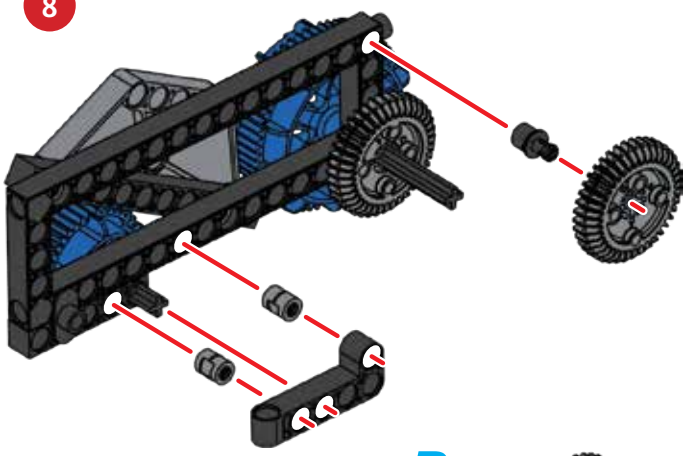

B.

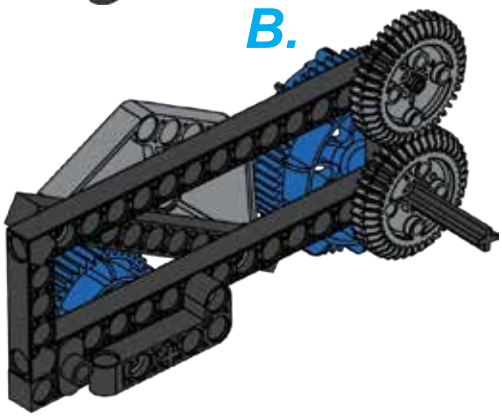

9

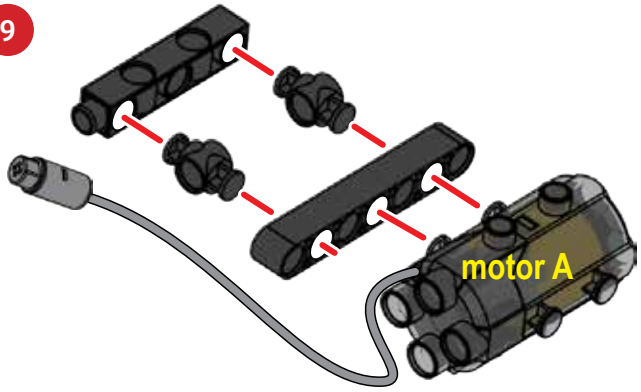

10

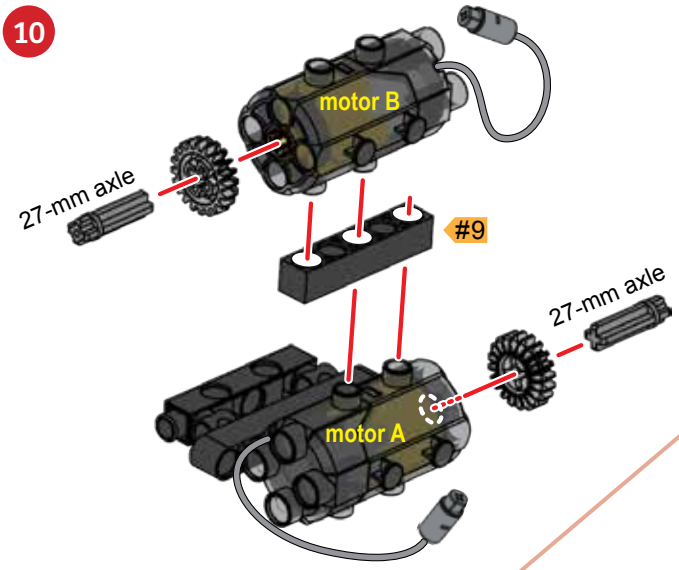

11

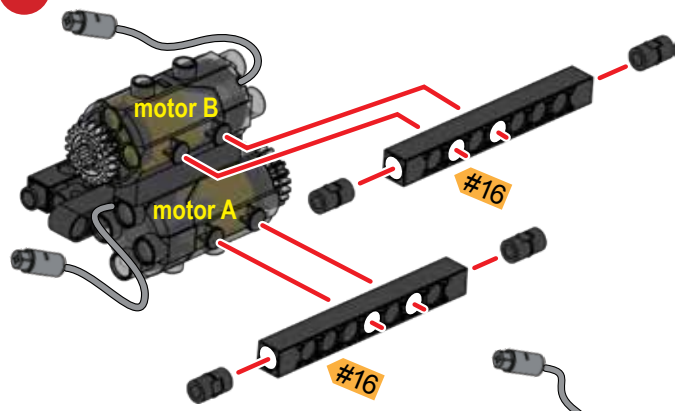

C.

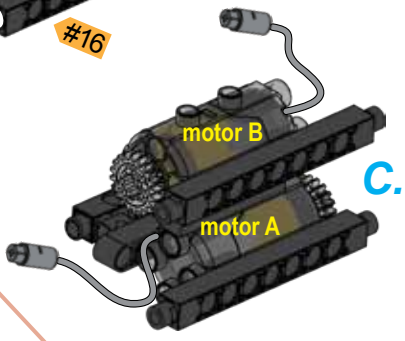

12

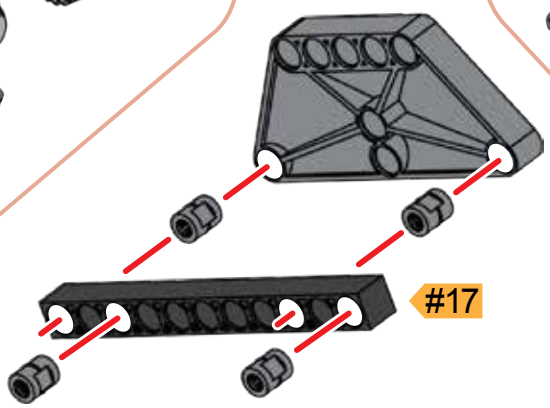

13

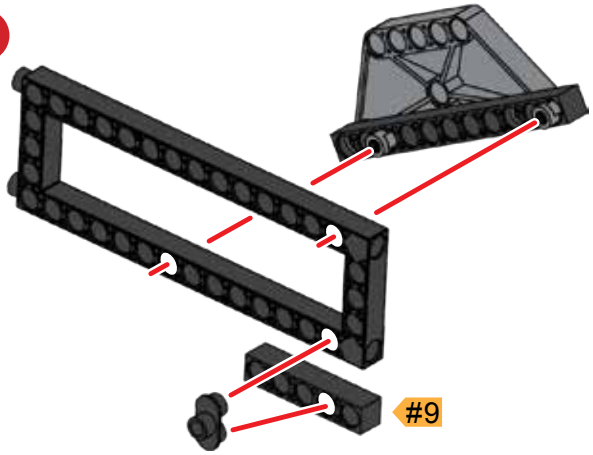

14

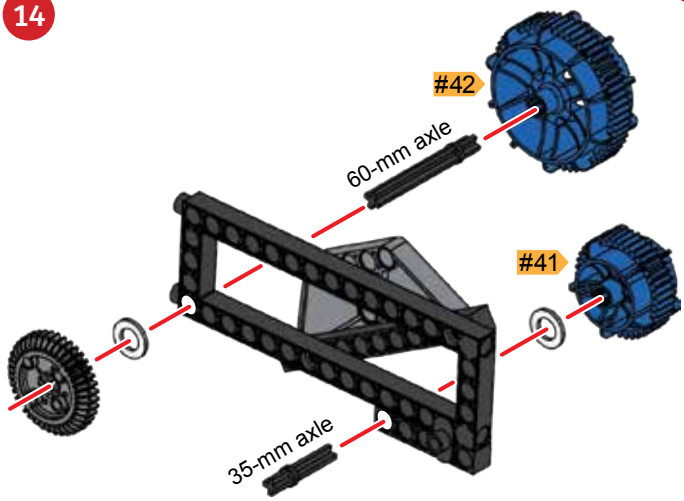

15

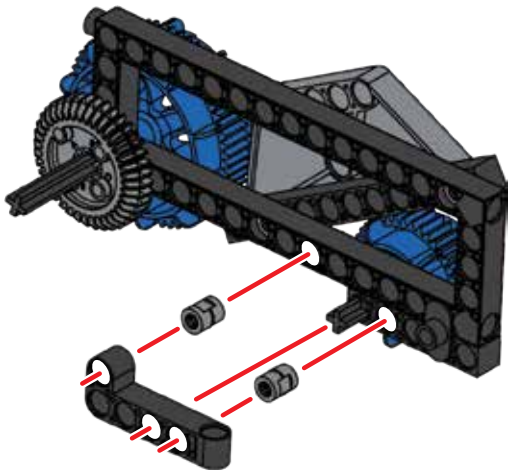

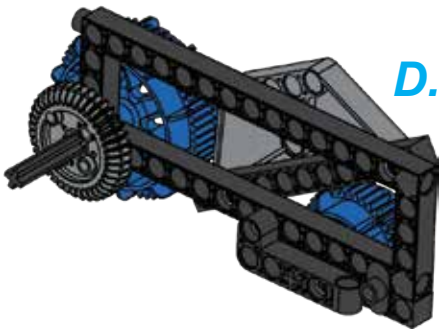

16

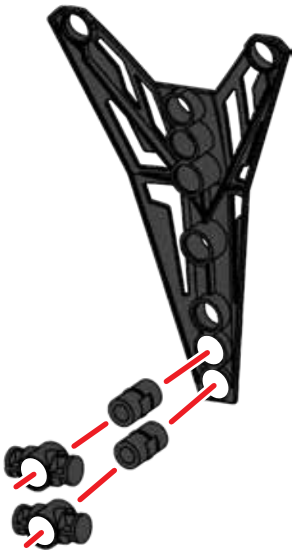

17

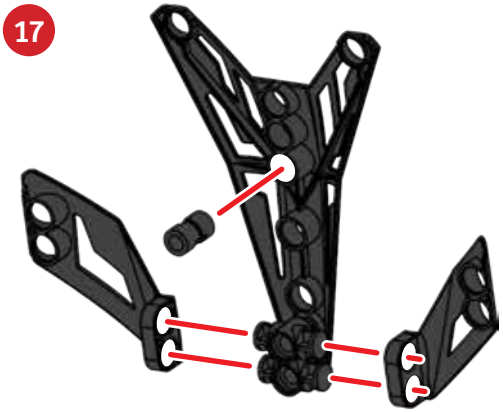

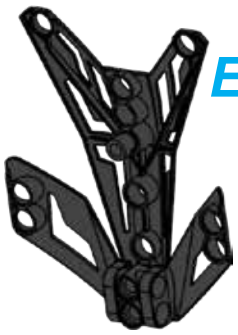

19



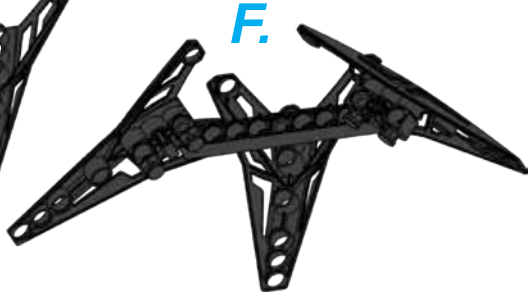

18

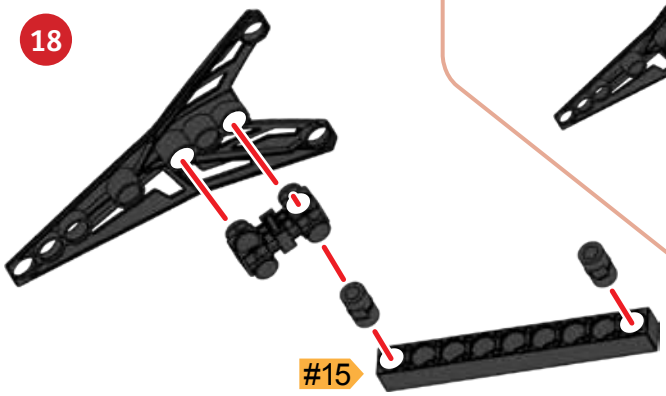

20

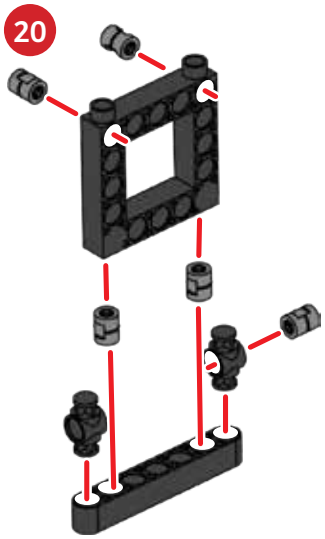

21

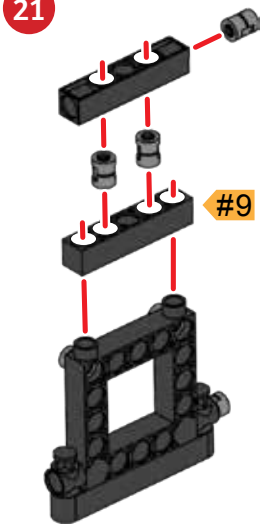

22

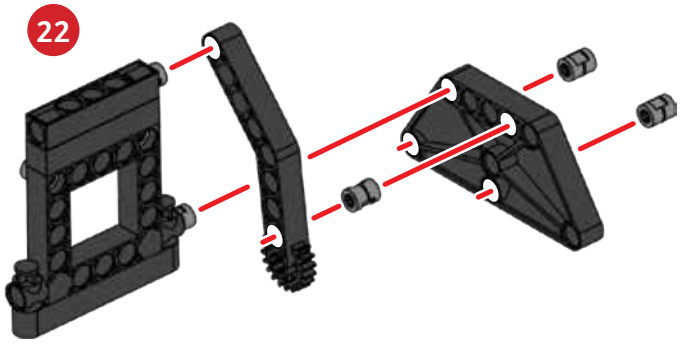

23

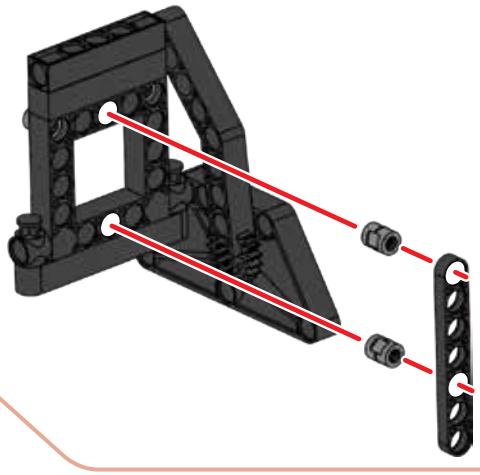

24

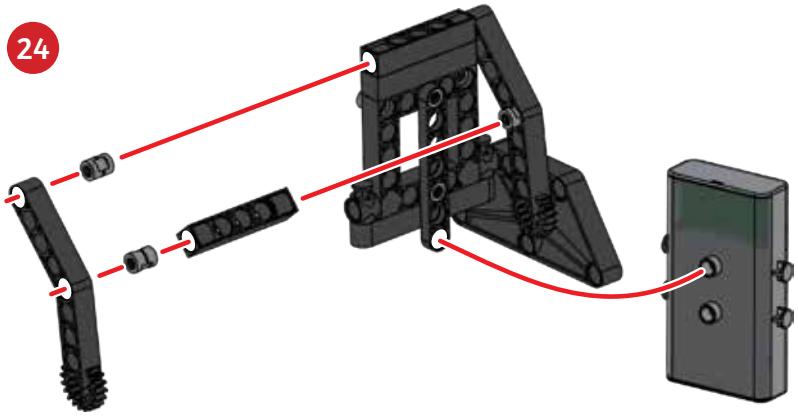

ultrasonic sensor

25

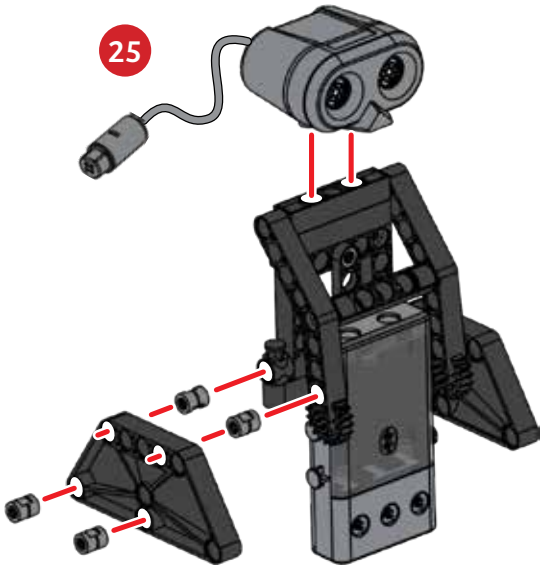

26

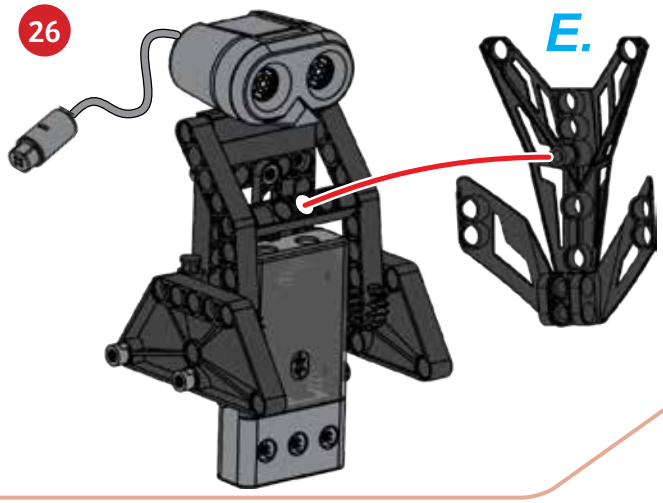

27

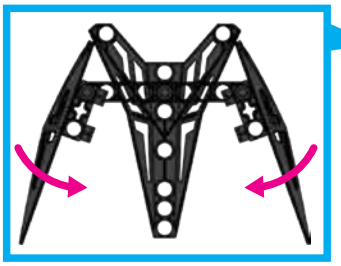

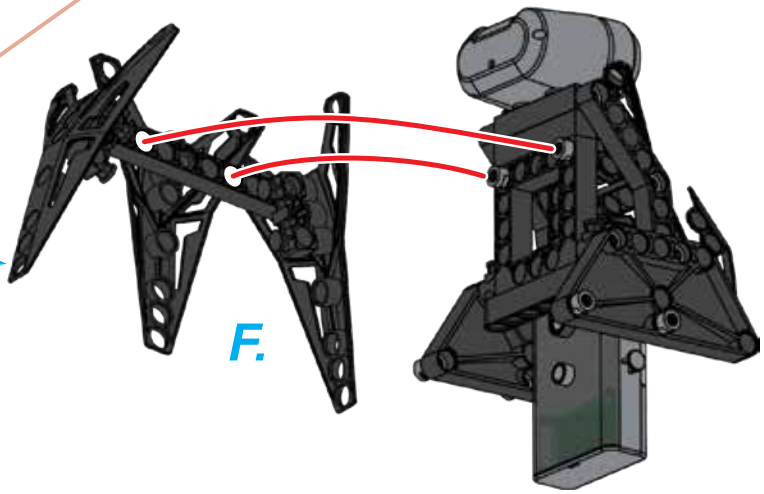

28

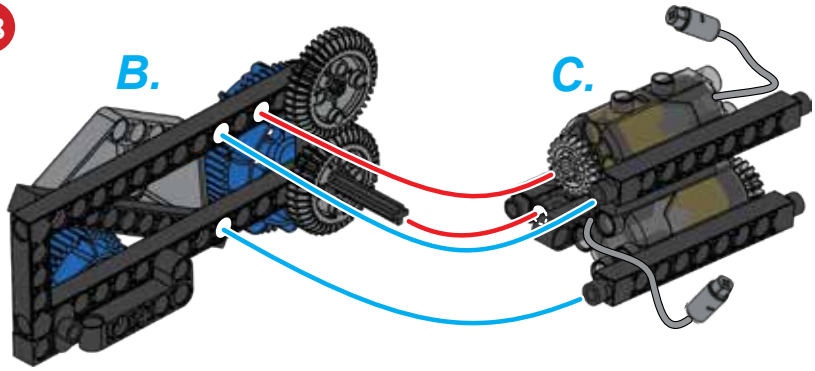

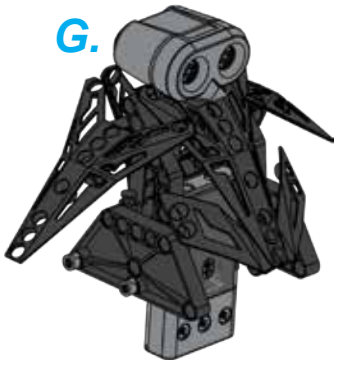

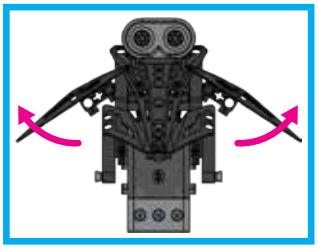

29

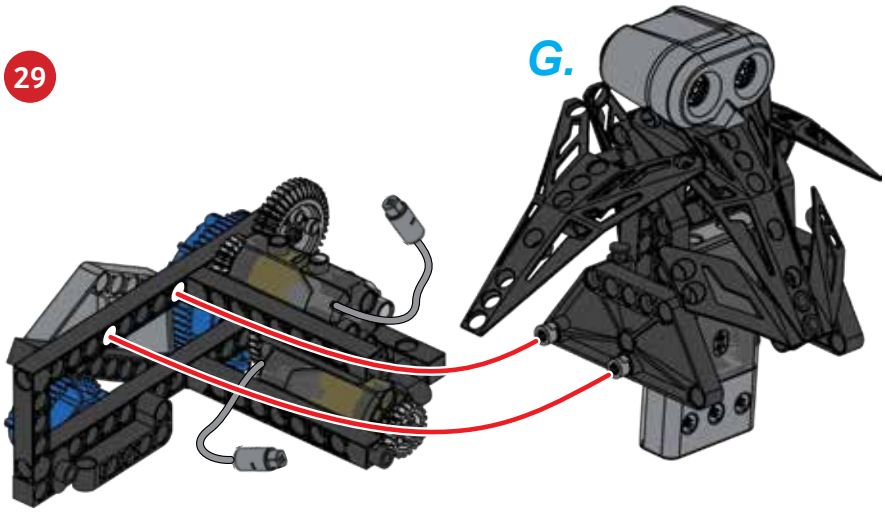

30

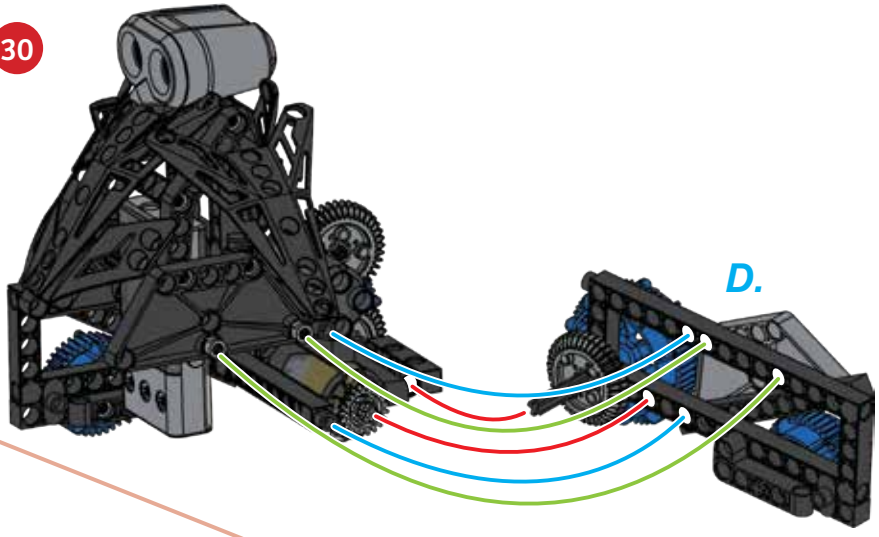

31

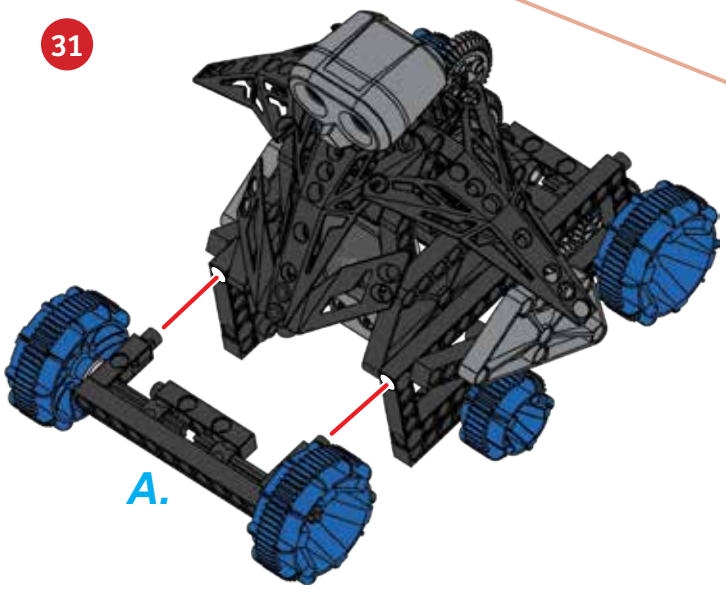

32

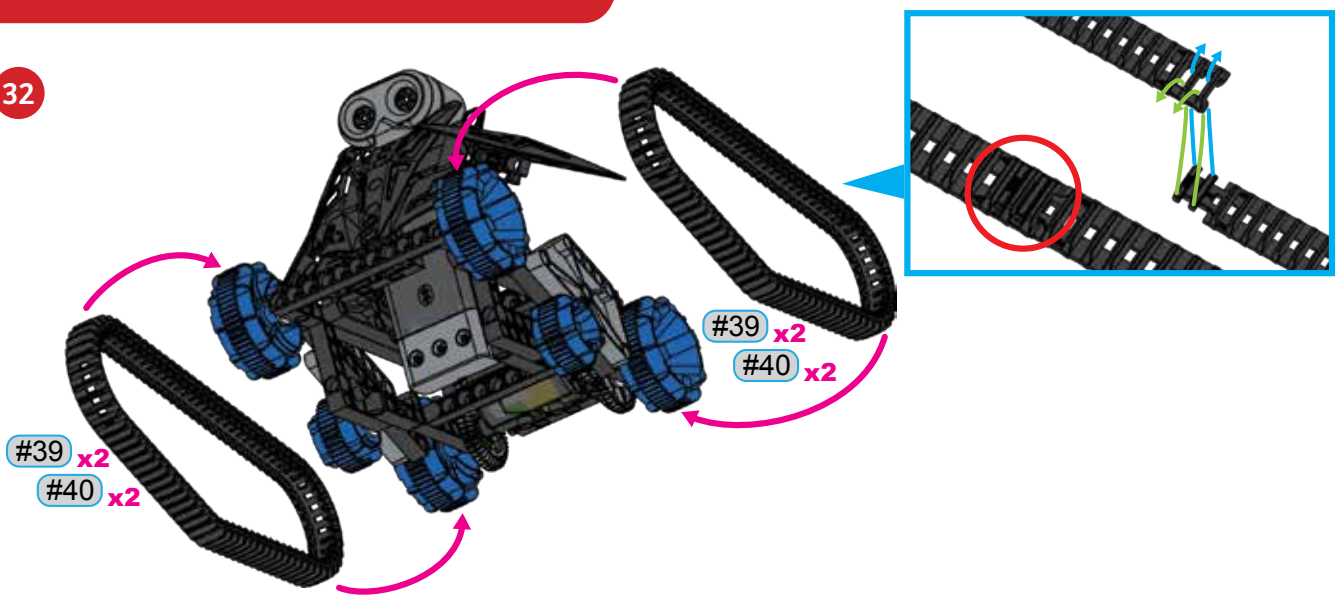
#39 x2
#40 x2
#39 x2
#40 x2

33

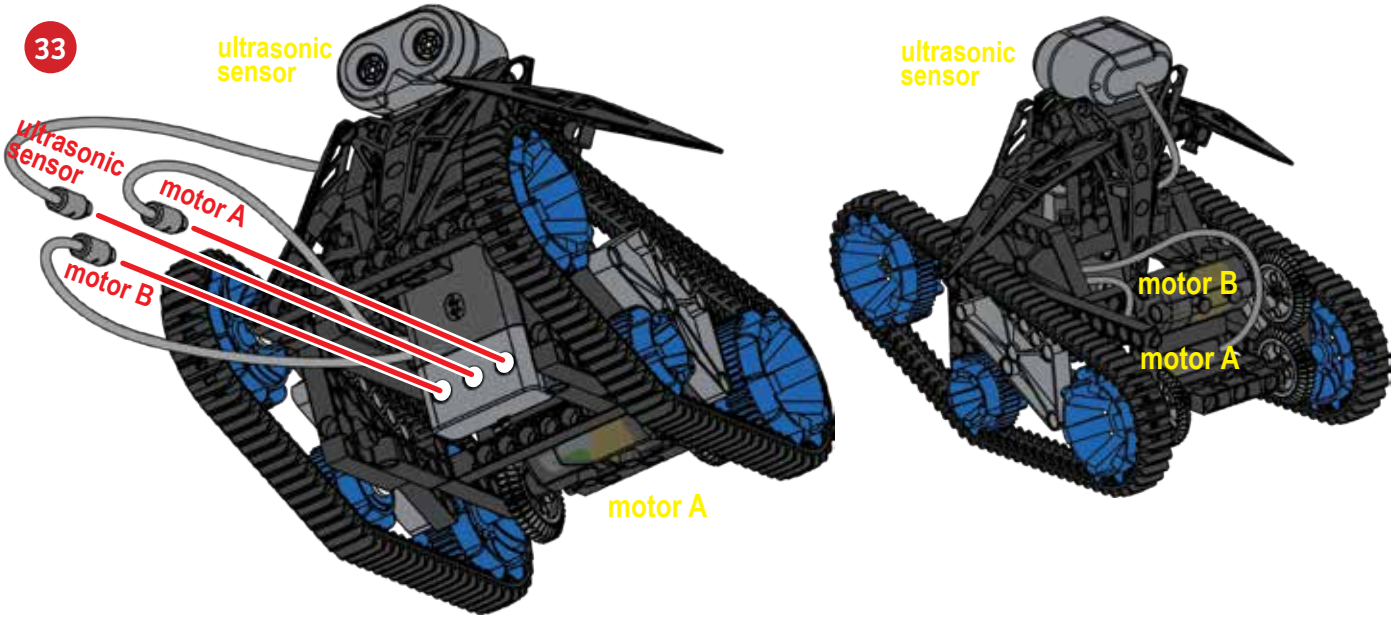
ultrasonic sensor
ultrasonic sensor
motor A
motor B
motor A
ultrasonic sensor
motor B
motor A

34

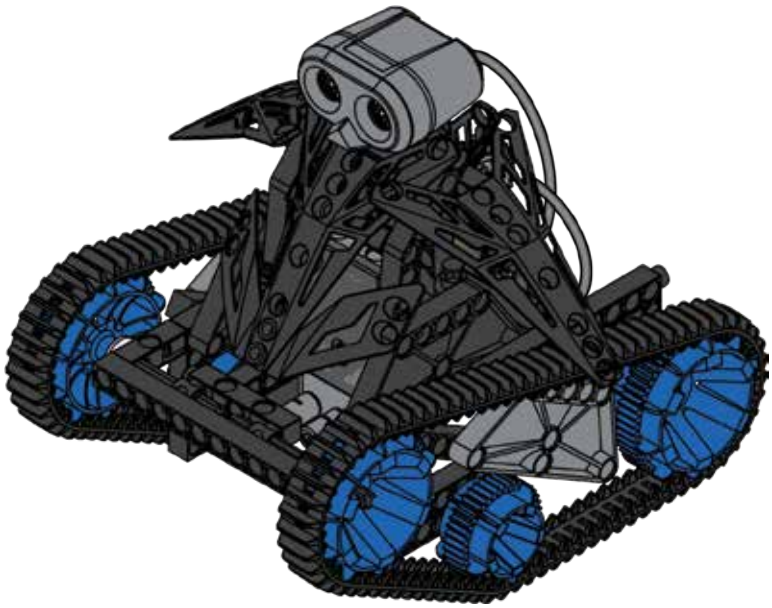

Done!

PROGRAMMING

SAMPLE PROGRAM FOR THE TRACKER BOT

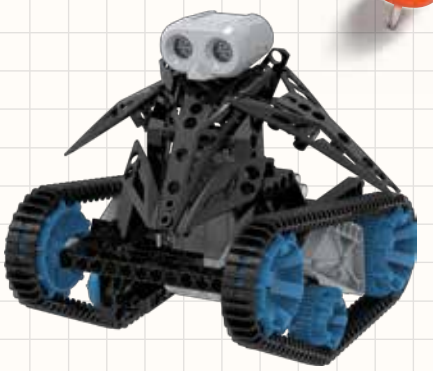

The tracker bot is able to use its ultrasonic sensor to follow a moving thing, such as your hand, around. Place the tracker bot a few feet away from any large objects such as walls or furniture. Run the program and move your hand toward the front of the tracker bot. Once the tracker bot has detected your hand with its ultrasonic sensor it will move toward you. Try to get the tracker bot to follow your hand as you move it slowly away from the robot.

This program is preloaded in the app under Program 19. Test it out and write down how the robot behaves for each program segment below.



PROGRAMMING NOTES

DEMO PROGRAM:

Program 19

OPENING SEGMENT:

SEGMENT 0-50:

SEGMENT >51:

DOZER BOT

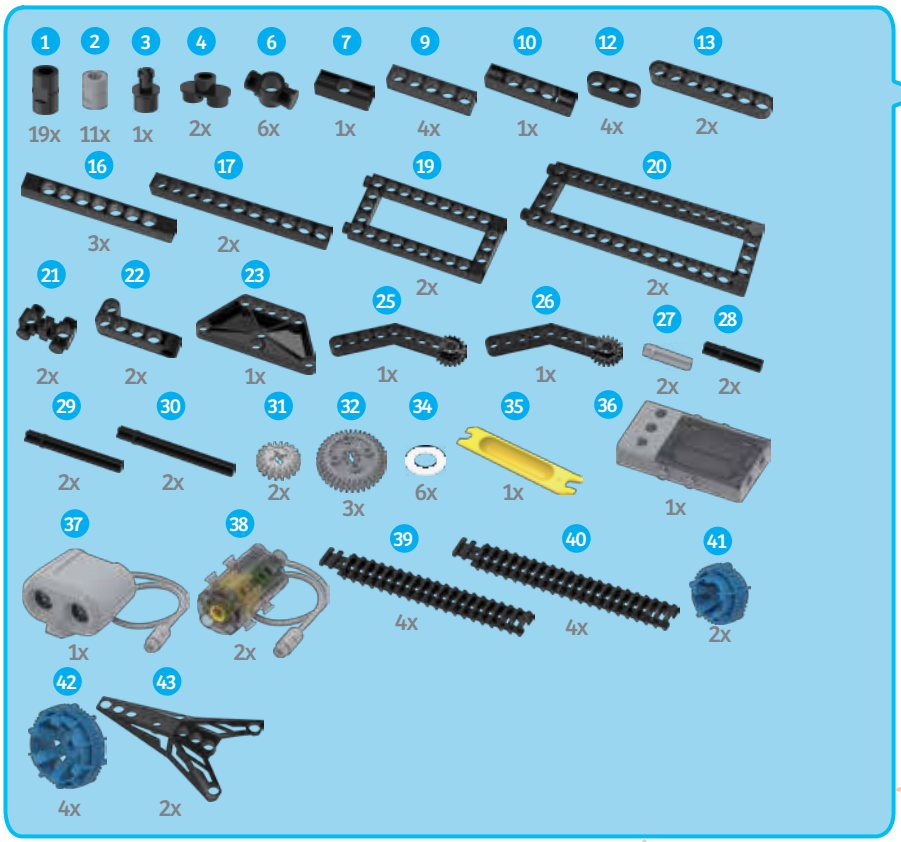

DIGITAL ASSEMBLY INSTRUCTIONS

Scan this QR code to open the product web page. Then, tap the link to access the digital assembly instructions app.

1

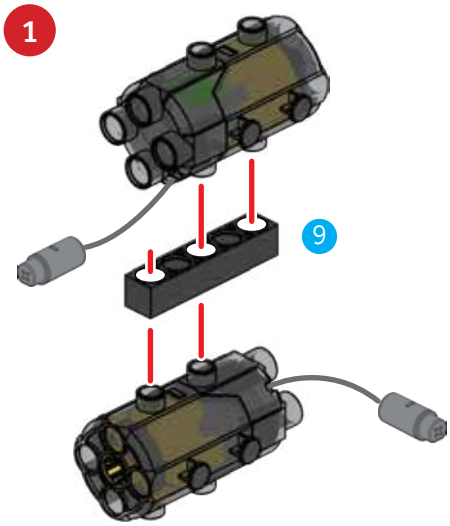

2

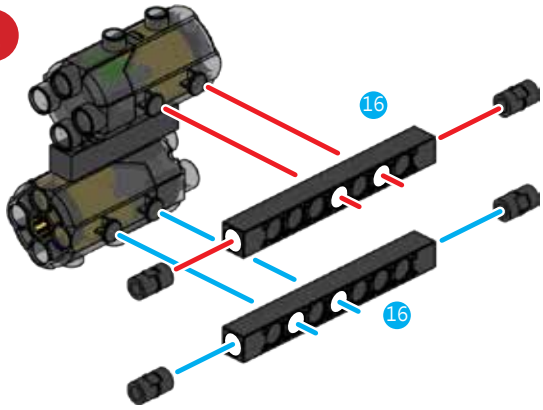

3

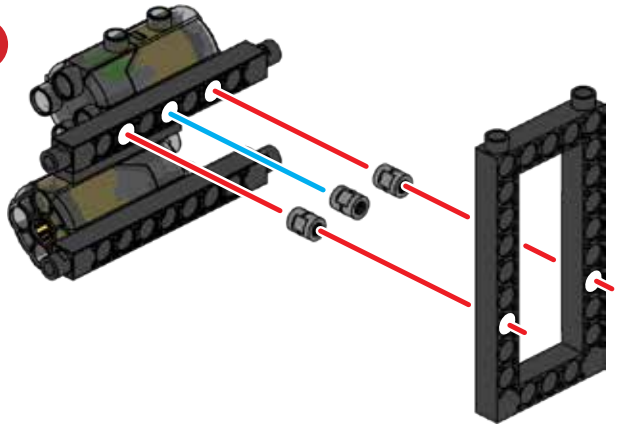

4

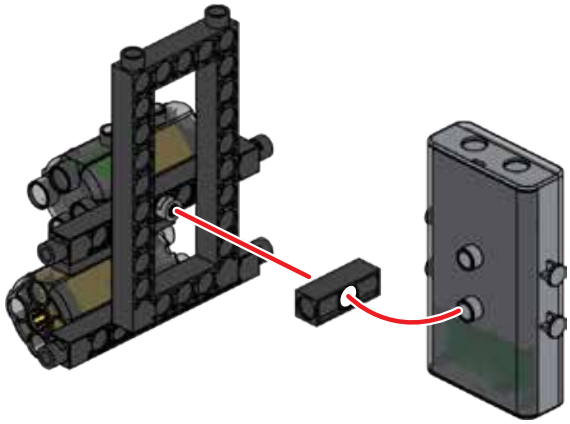

5

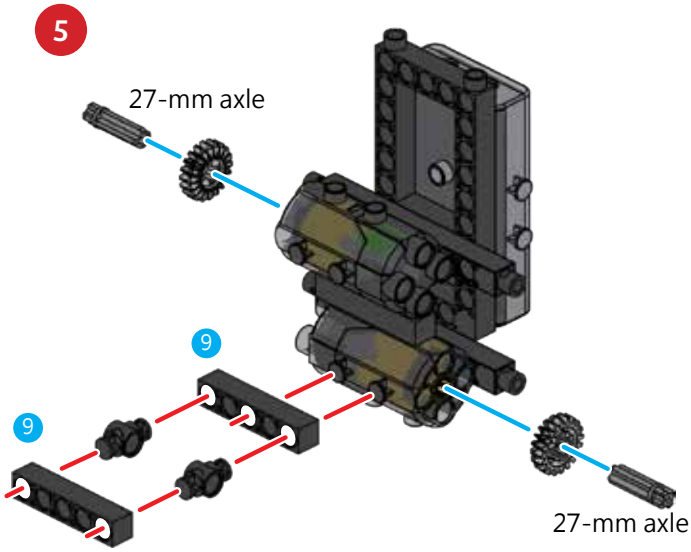

6

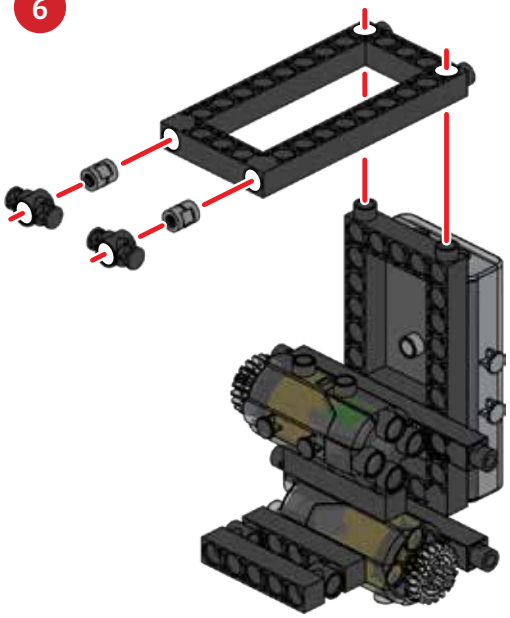

7

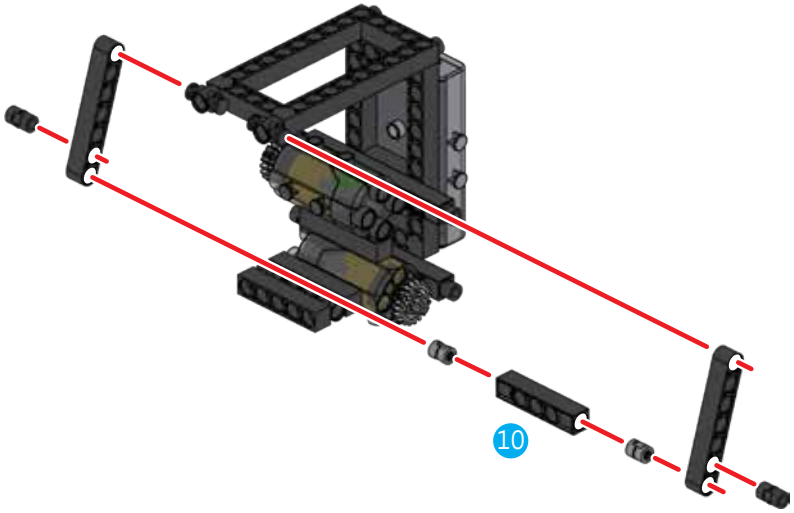

8

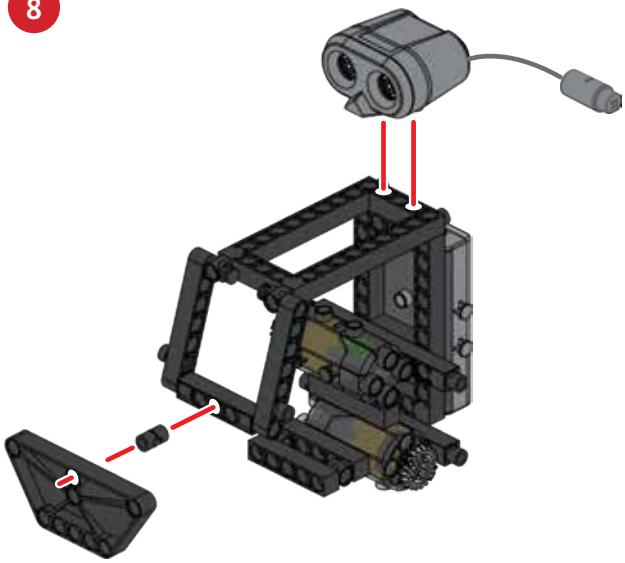

9

x2

70-mm axle

10

x2

35-mm axle

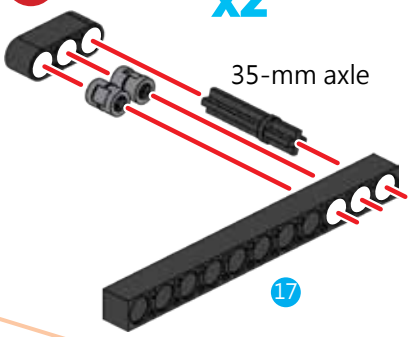

11

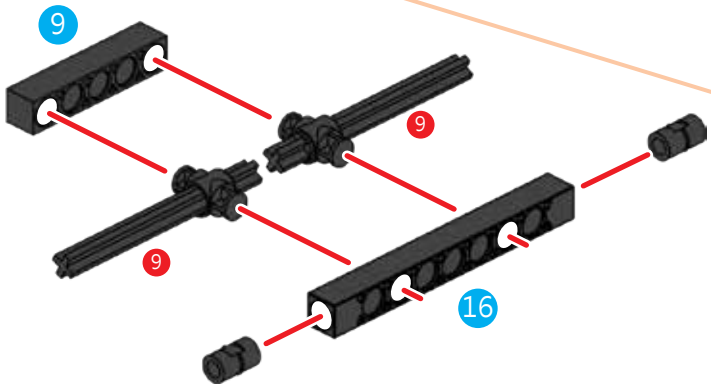

12

60-mm axle

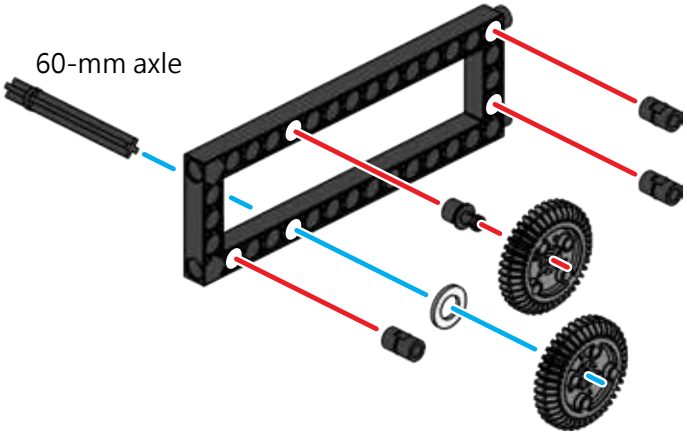

13

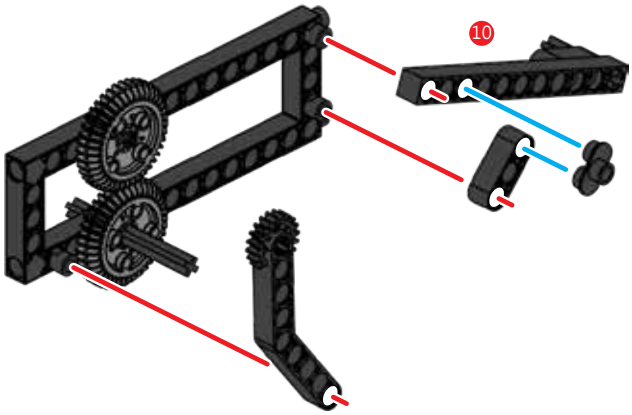

14

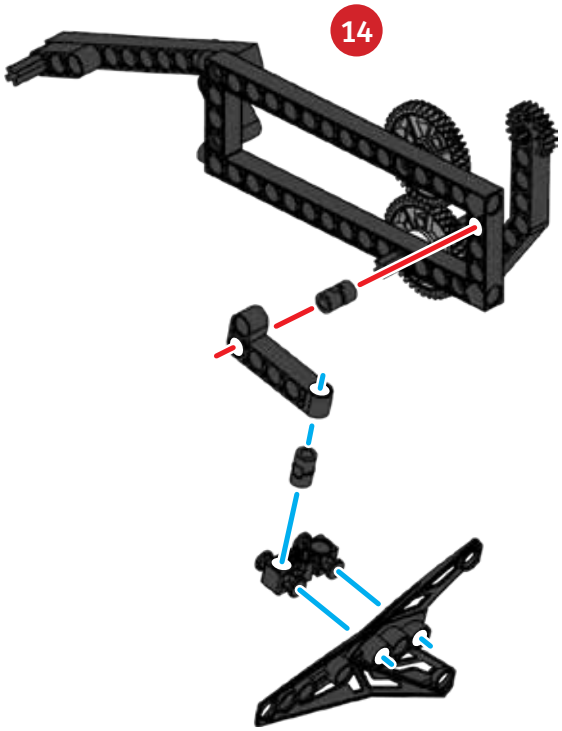

15

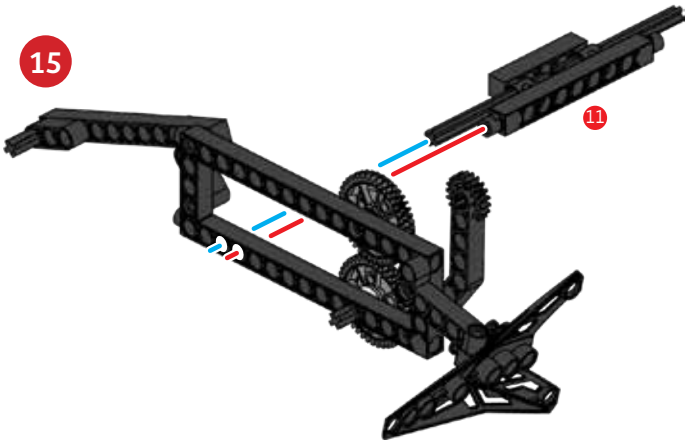

16

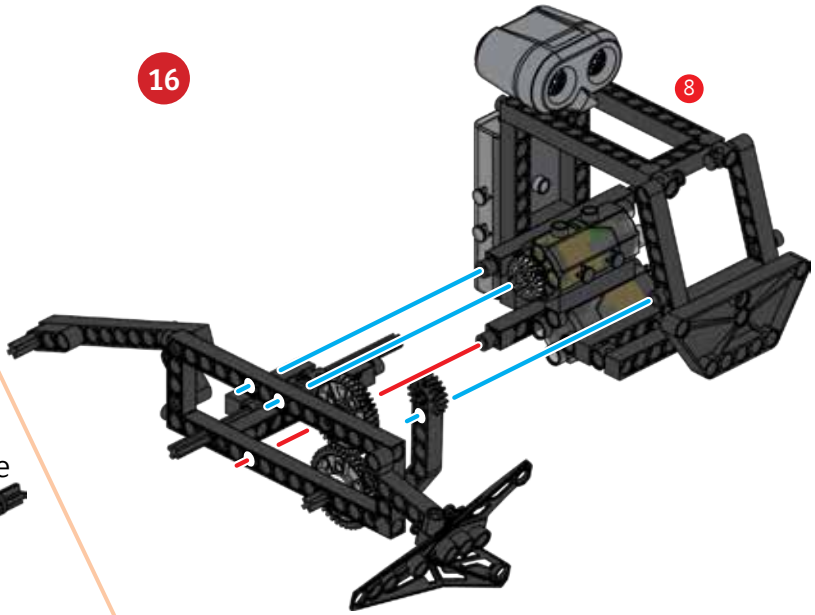

17

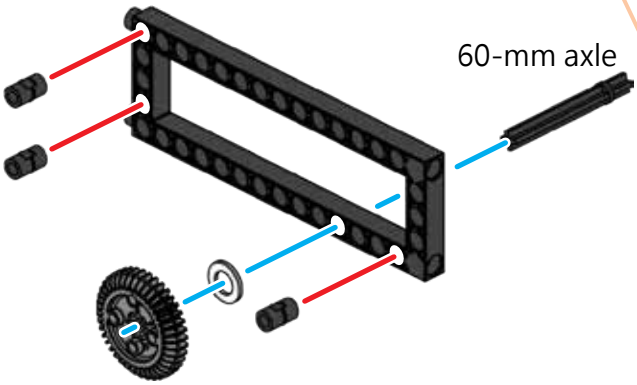

18

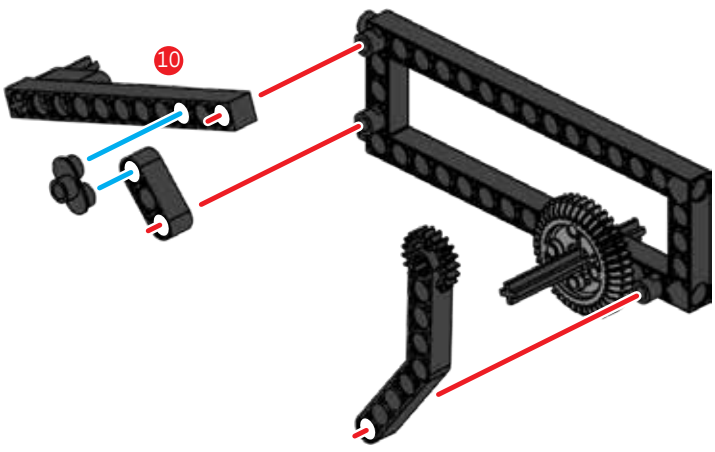

19

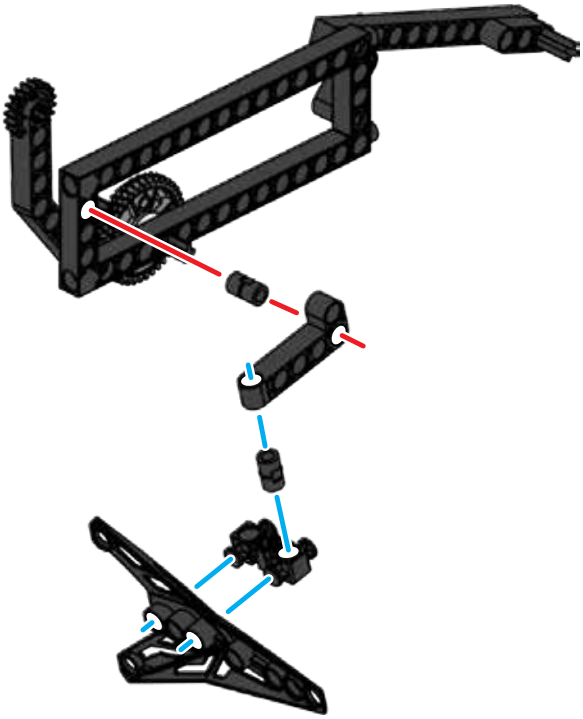

20

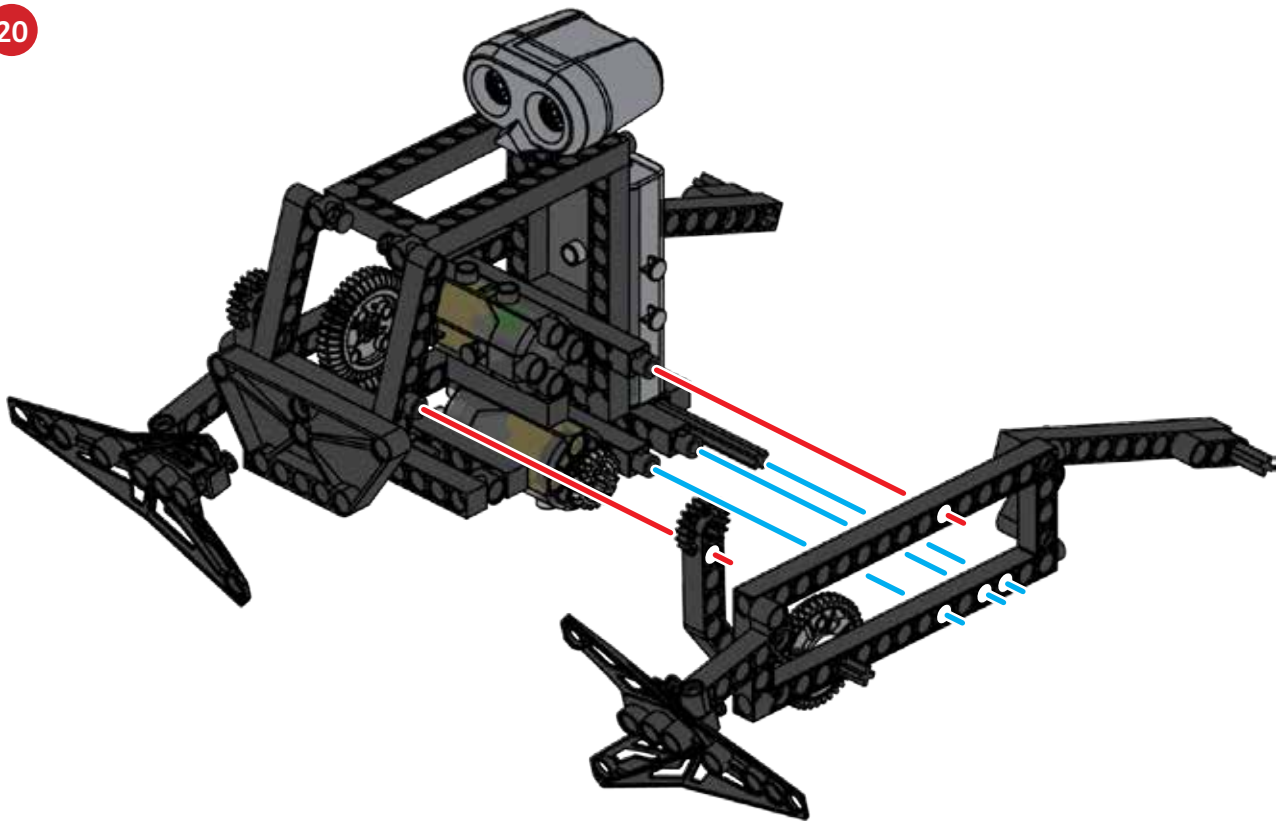

21



22

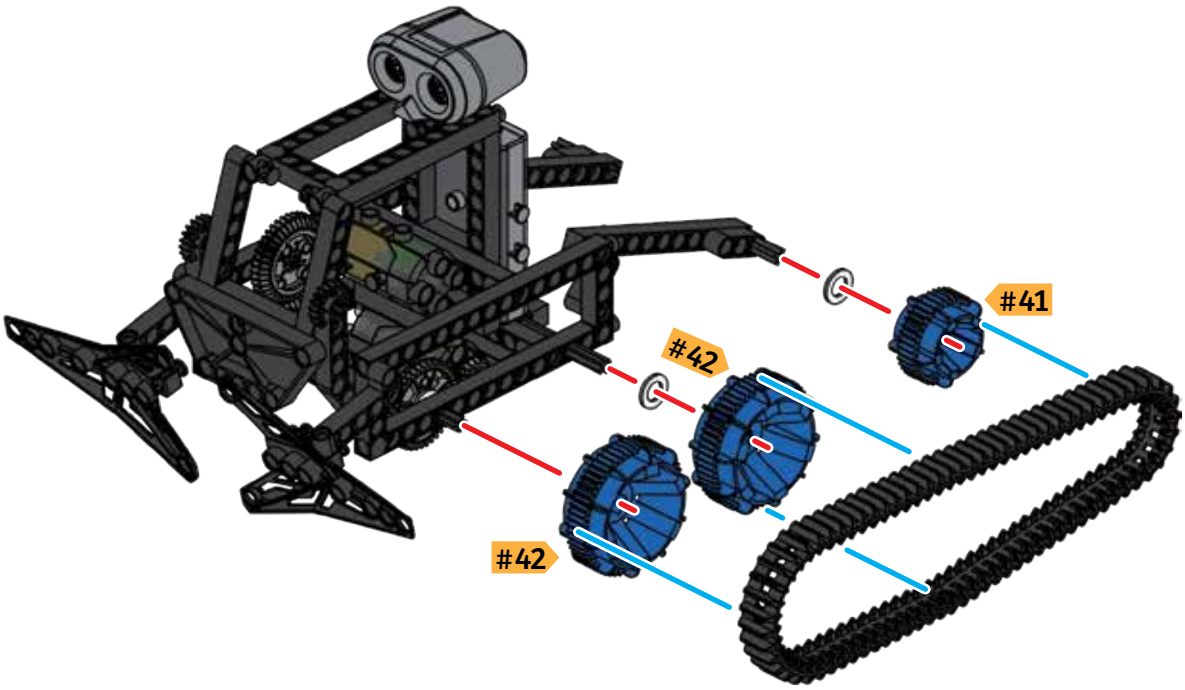

23

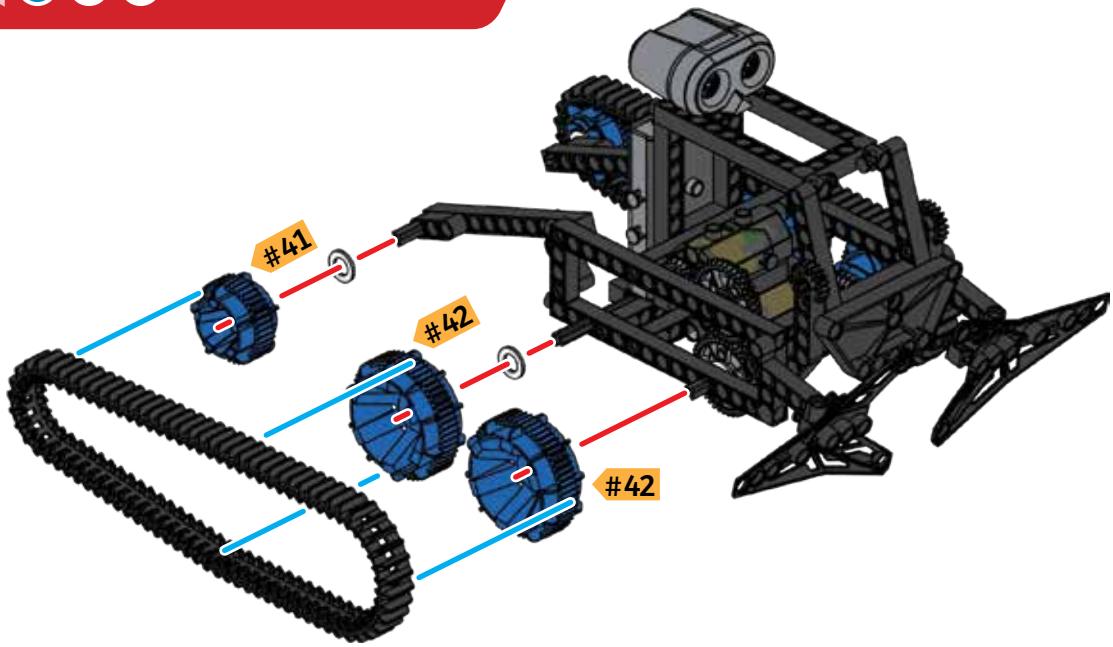
#41
#42
#42

24

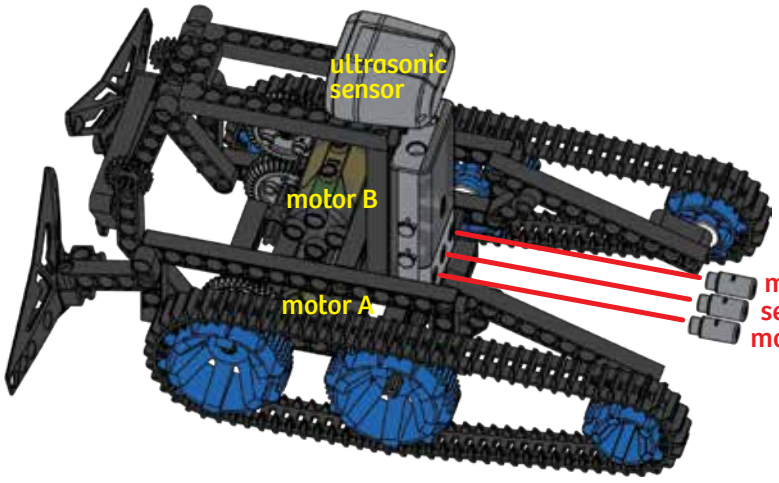
ultrasonic sensor
motor B
motor A
motor A
sensor
motor B

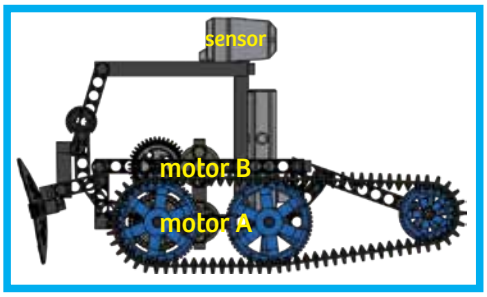
sensor
motor B
motor A

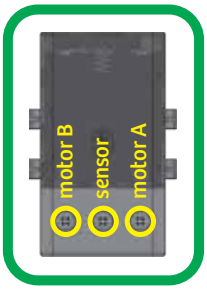
motor B
sensor
motor A

25

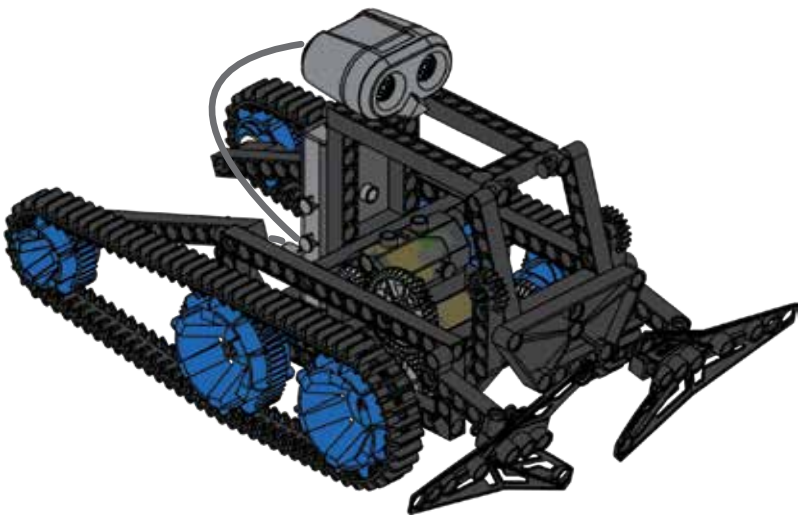

Done!

PROGRAMMING

SAMPLE PROGRAM FOR THE DOZER BOT

Start by placing small objects, like toy blocks, around the floor of a room. The dozer bot is able to push objects around to create a path. When the program is run, the dozer bot will move forward until an object — like a piece of furniture or a wall — is in front of the ultrasonic sensor. The dozer bot will then stop, backup, turn, and then stop again. Then the dozer bot will continue in a new direction until the ultrasonic sensor detects another object.

This program is preloaded in the app under Program 20. Test it out and write down how the robot behaves for each program segment below.



PROGRAMMING NOTES

DEMO PROGRAM:

Program 20

OPENING SEGMENT:

SEGMENT 0-30:

SEGMENT >31:

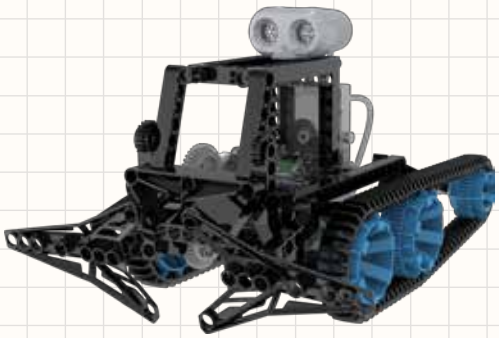

FIRE RESCUE BOT

DIGITAL ASSEMBLY INSTRUCTIONS

Scan this QR code to open the product web page. Then, tap the link to access the digital assembly instructions app.

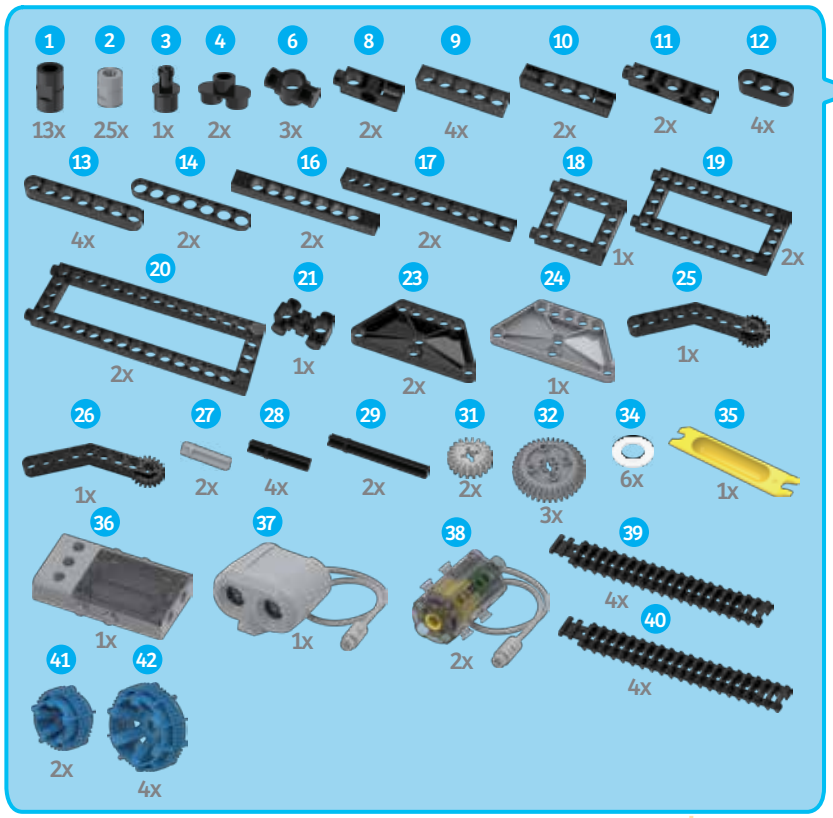

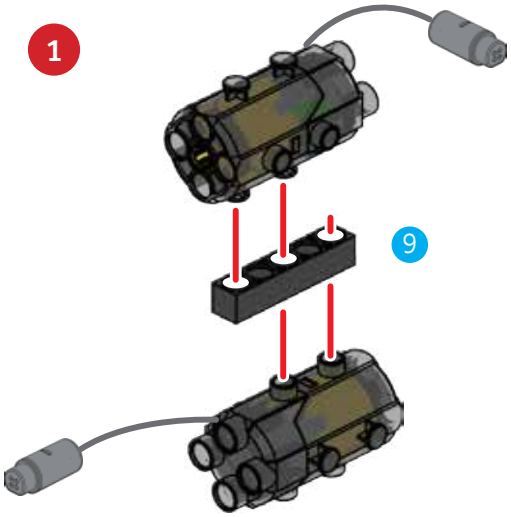

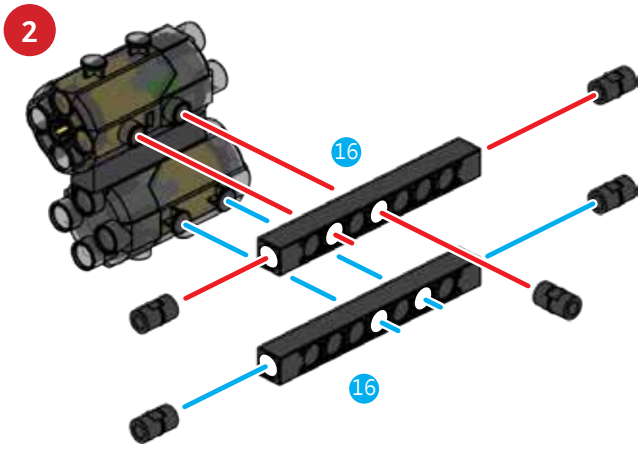

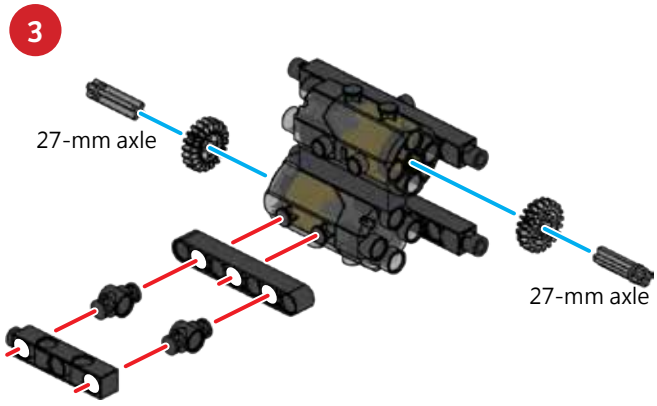

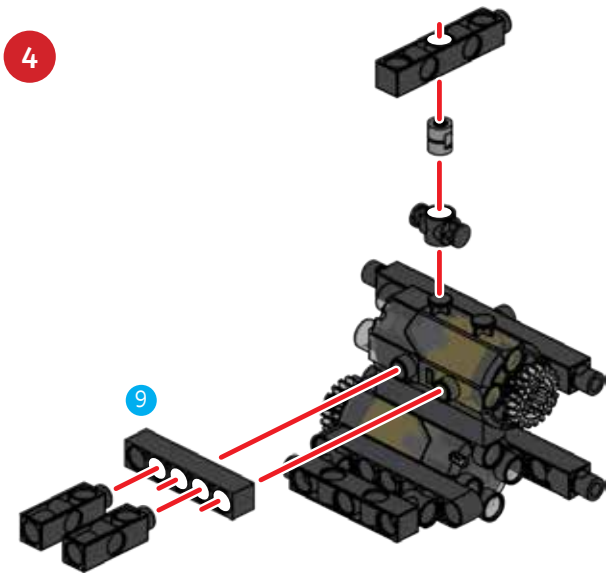

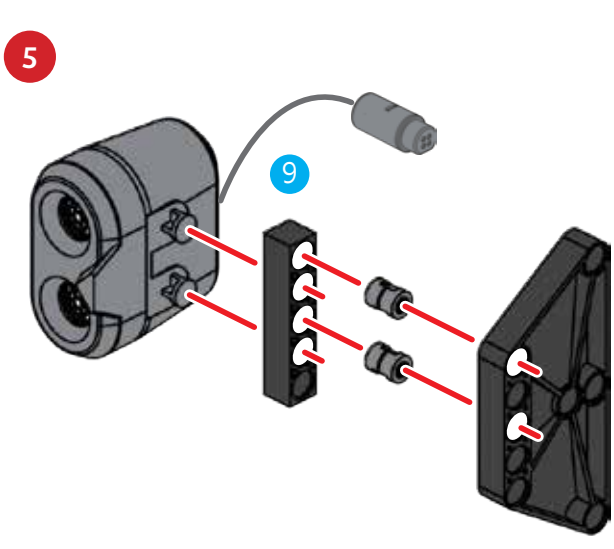

6

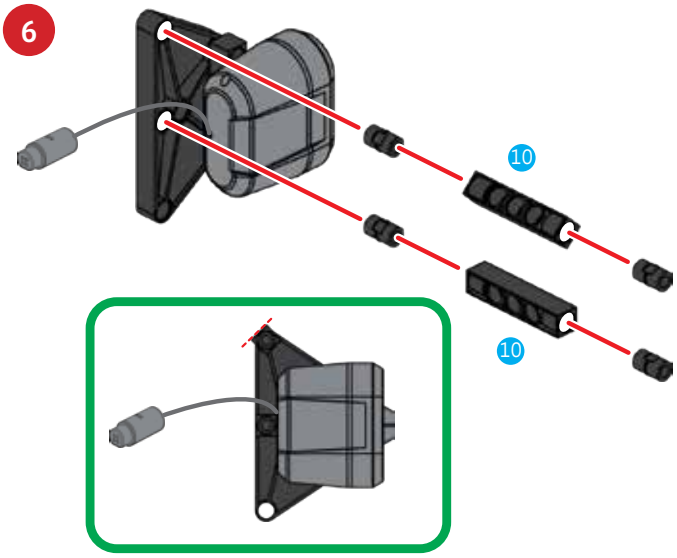

7

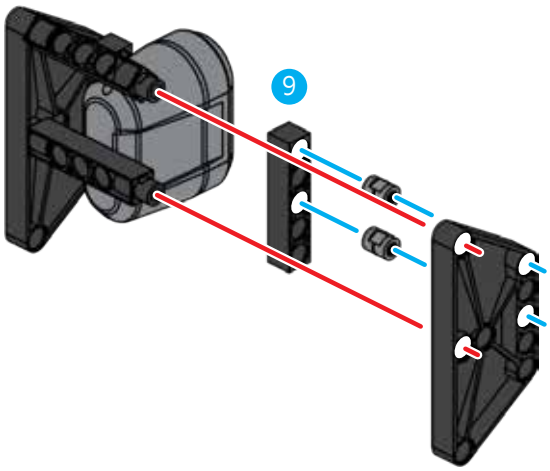

8

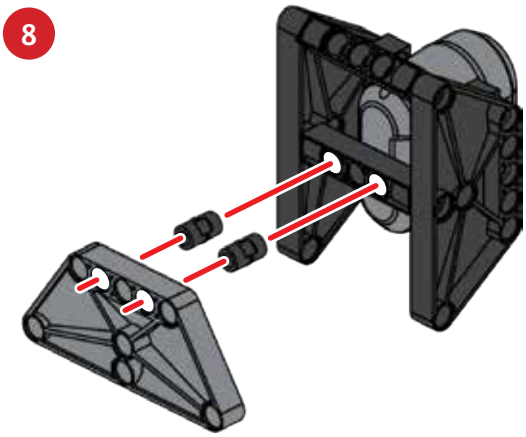

9

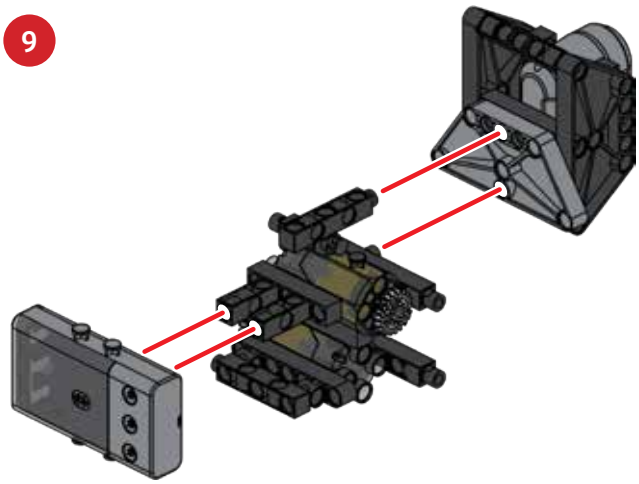

10

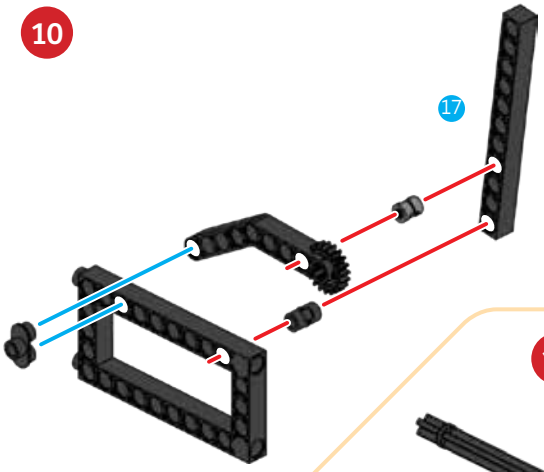

11

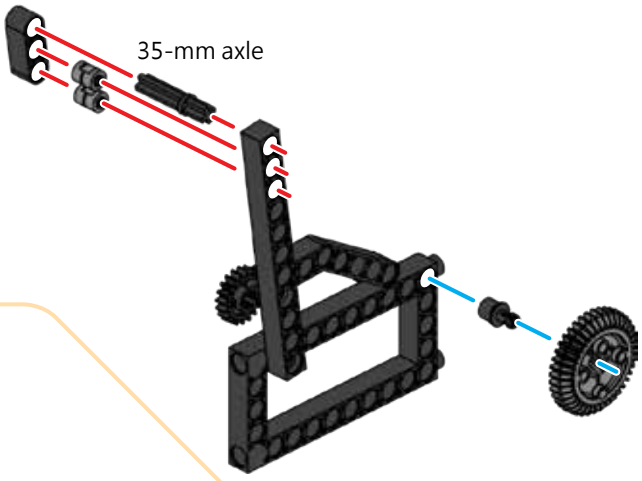

12

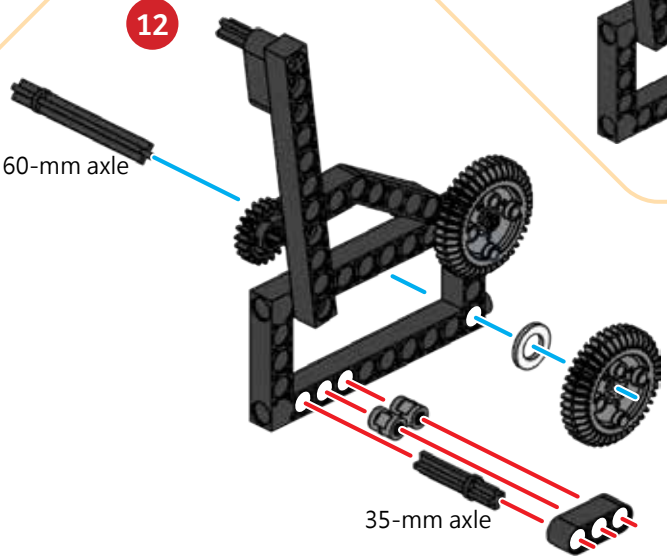

13

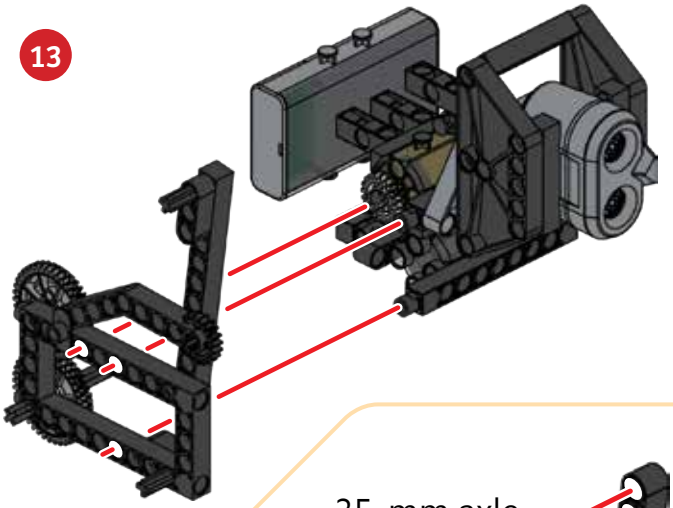

14

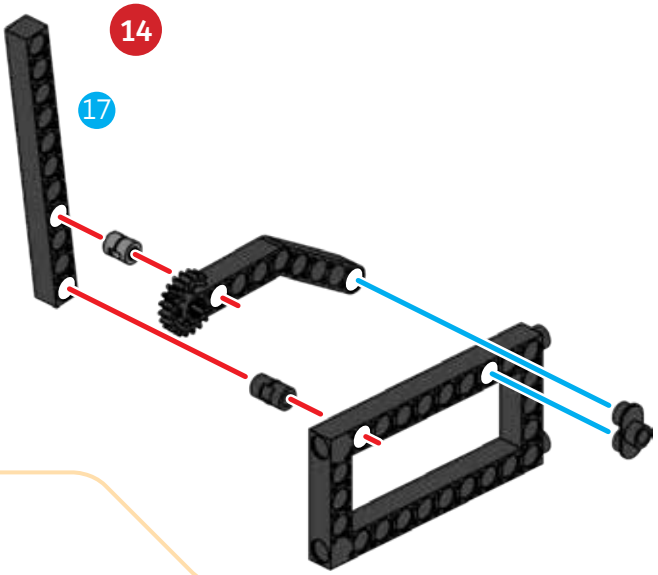

15

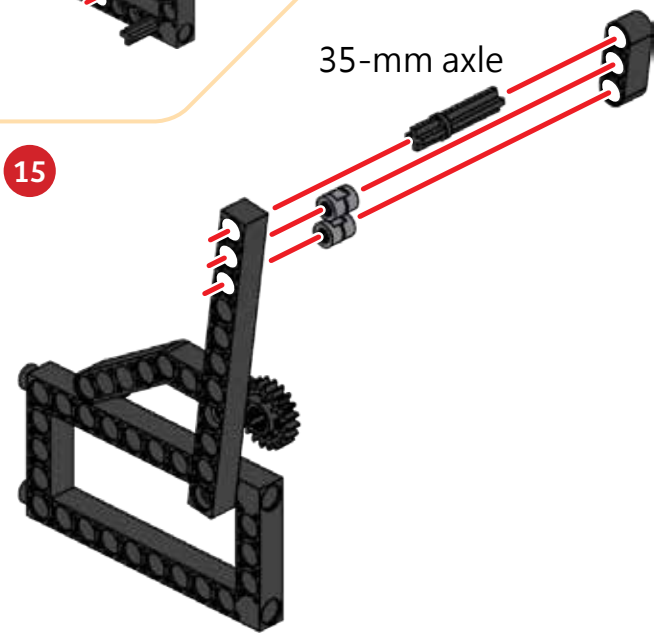

16

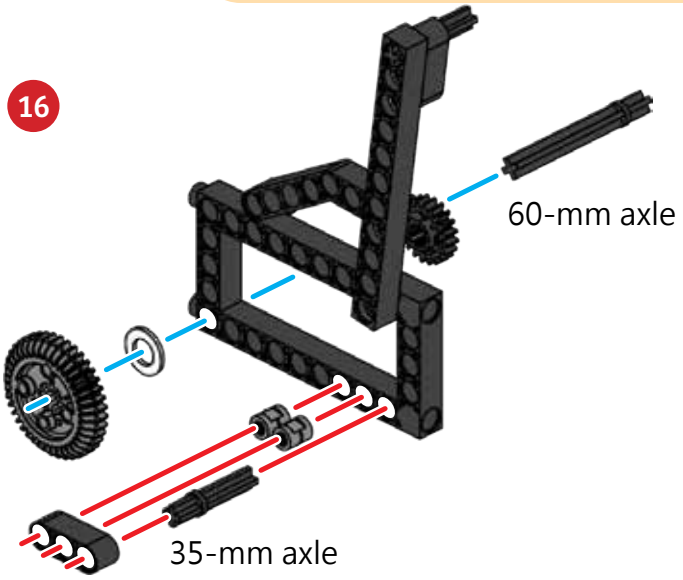

17

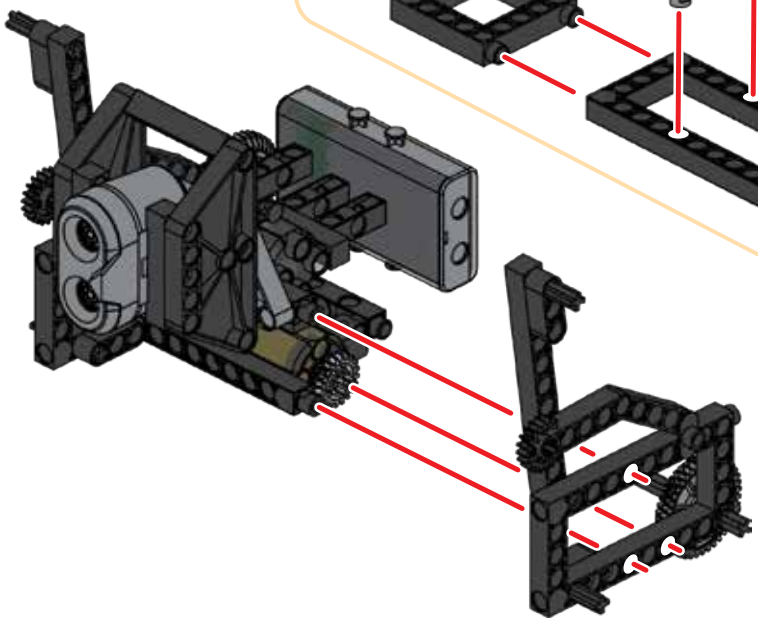

18

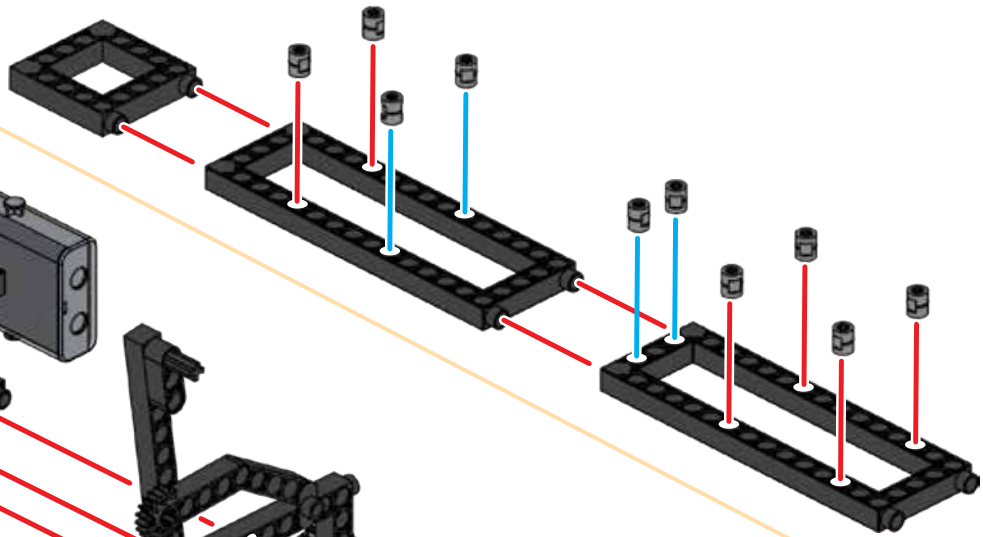

19

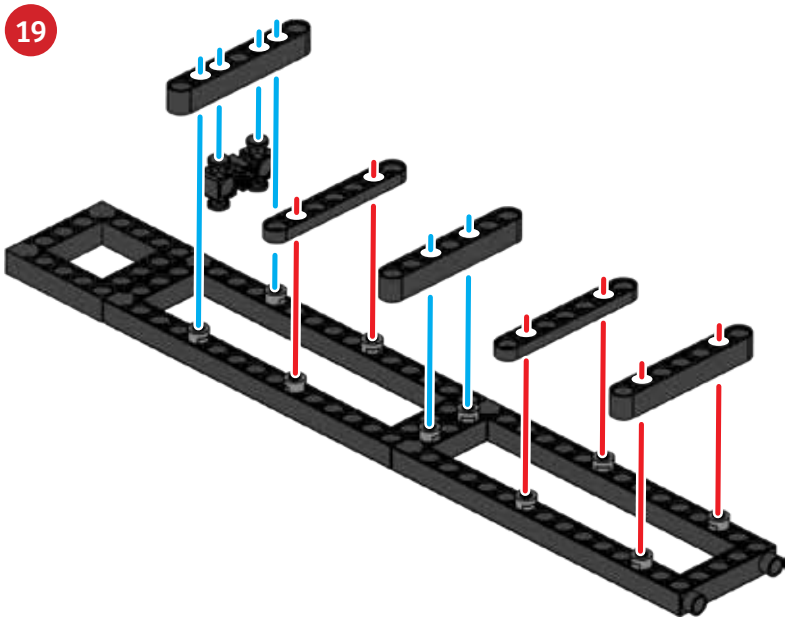

20

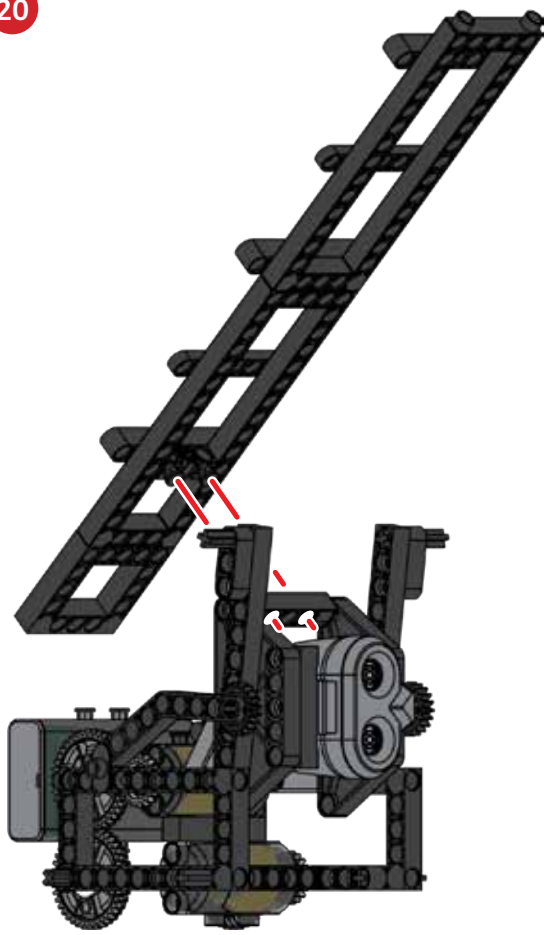

21

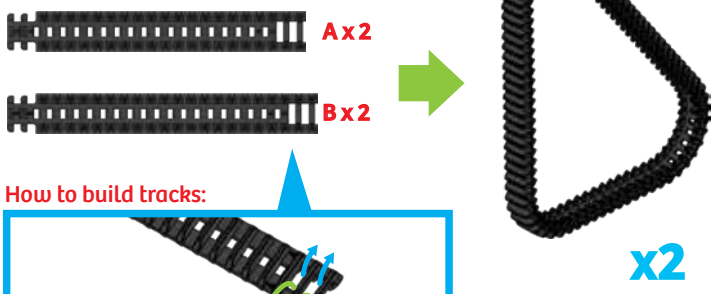

How to build tracks:

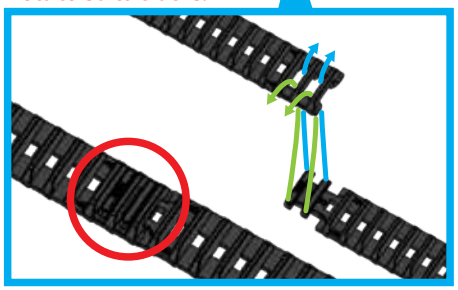

x2

22

23

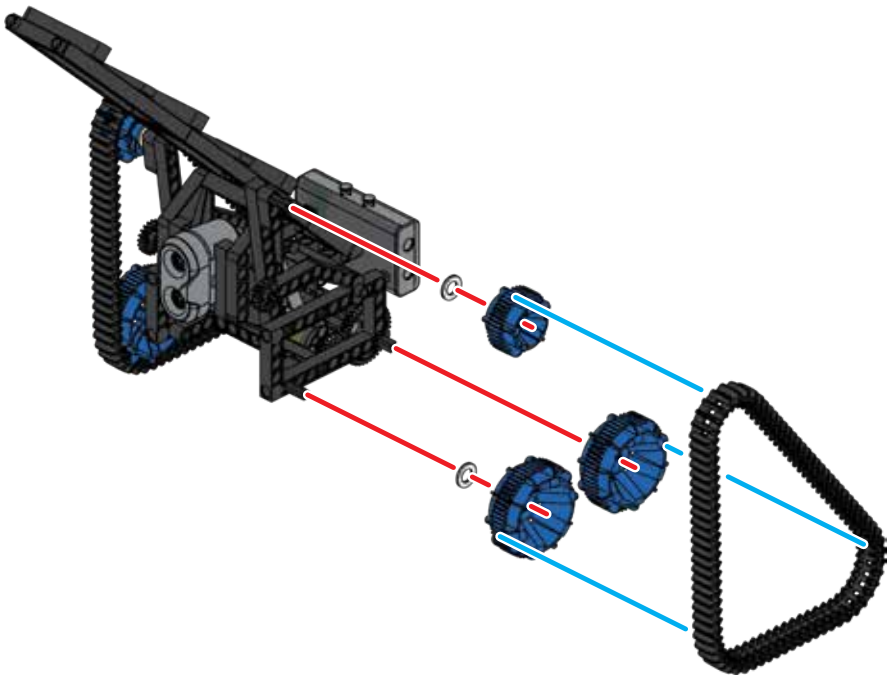

24

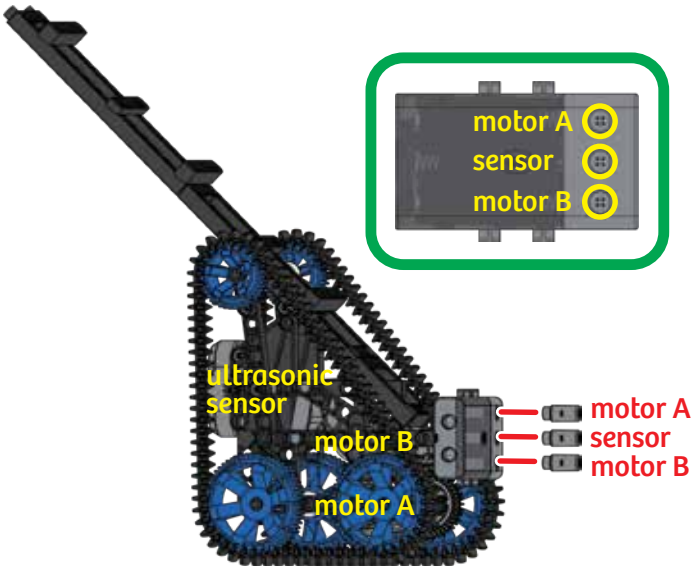
motor A
sensor
motor B
ultrasonic sensor
motor B
motor A
motor A
sensor
motor B

25



Done!

PROGRAMMING



SAMPLE PROGRAM FOR THE FIRE RESCUE ROBOT

The fire rescue robot is programmed to drive up close to an object so that its ladder is positioned right next to the object. Start by placing the fire rescue robot in front of an object. The fire rescue robot will pause, then back away, and then turn. Then it will move forward toward another object.

This program is preloaded in the app under Program 21. Test it out and write down how the robot behaves for each program segment below.

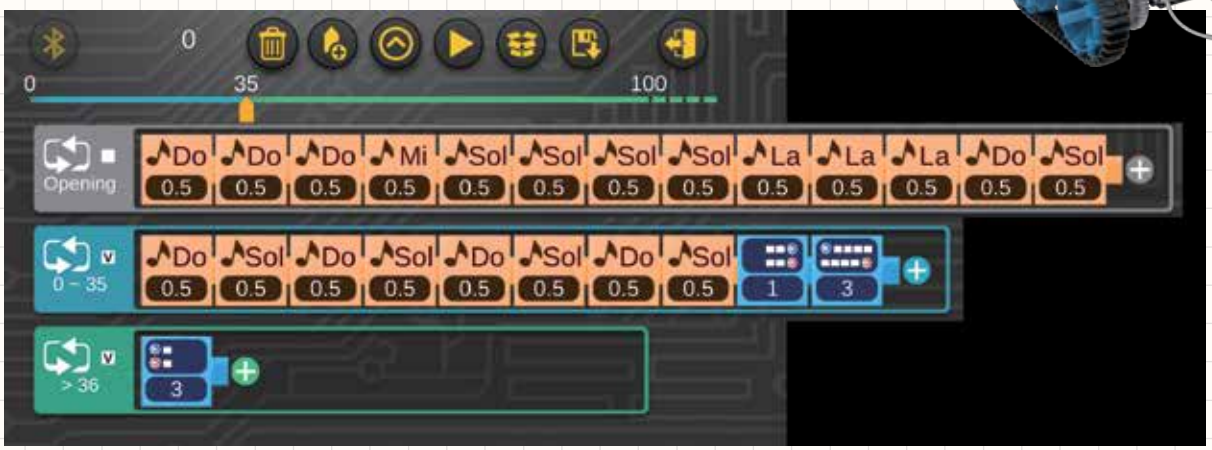

PROGRAMMING NOTES

DEMO PROGRAM:

Program 21

OPENING SEGMENT:

SEGMENT 0-35:

SEGMENT >36:

CONVEYOR BELT

DIGITAL ASSEMBLY INSTRUCTIONS

See page 3 for download info.

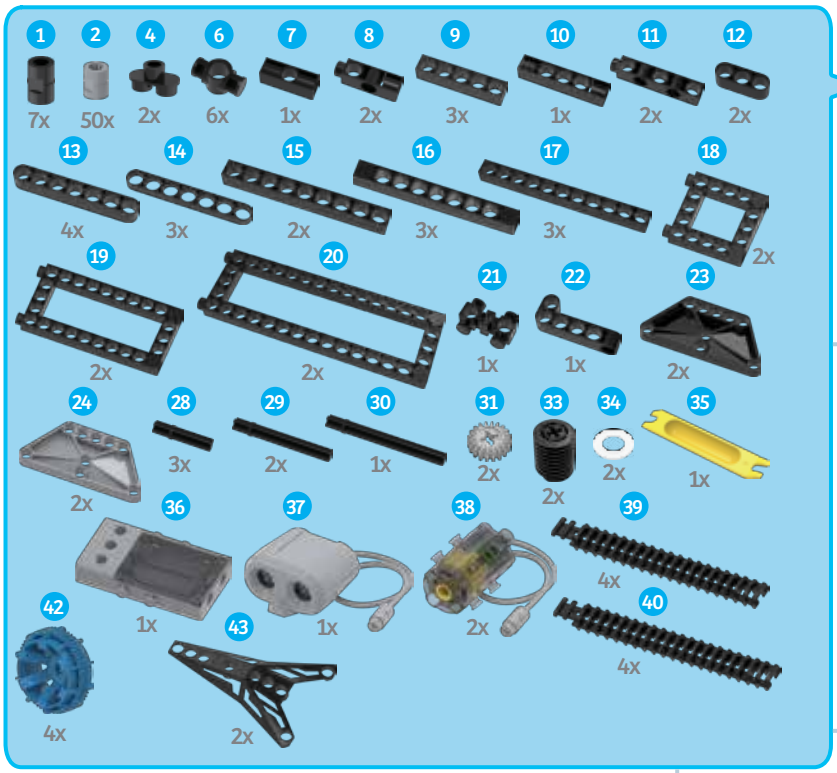

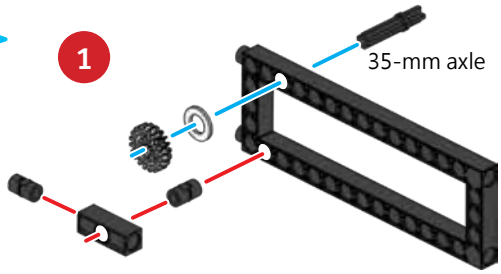

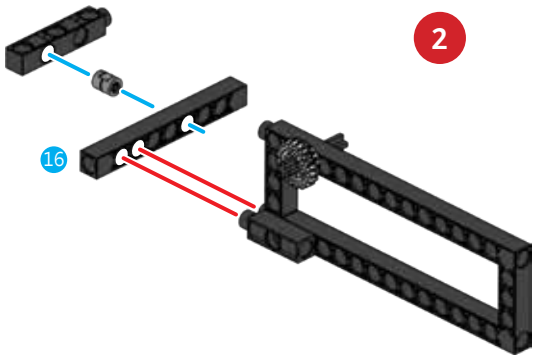

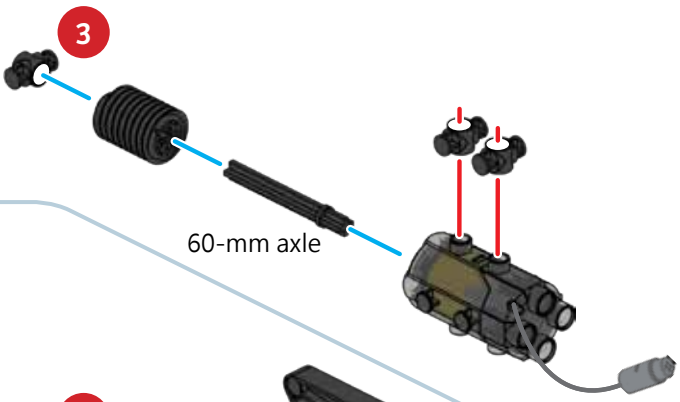

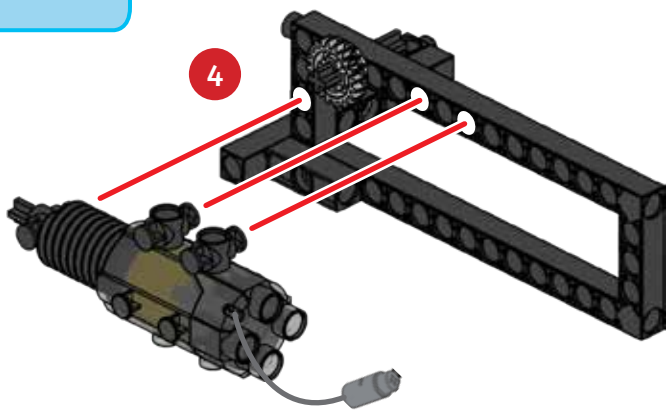

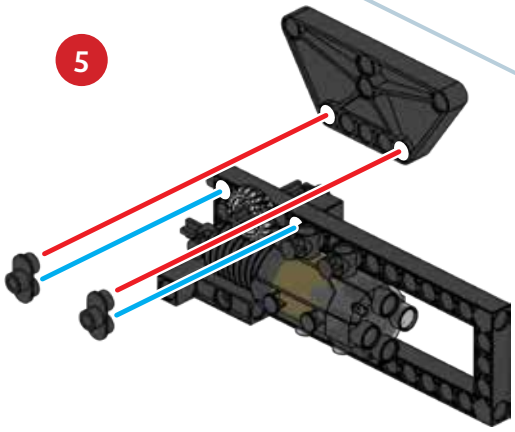

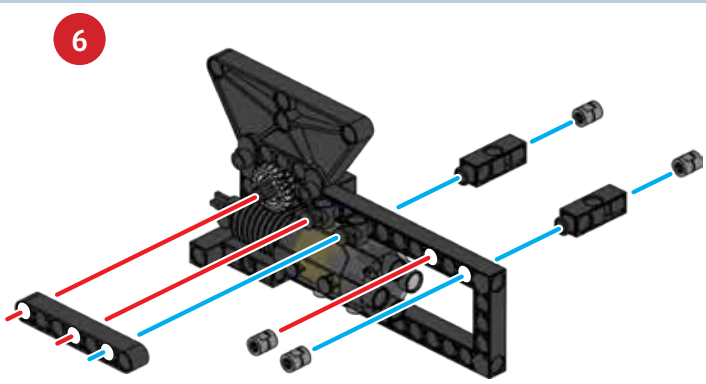

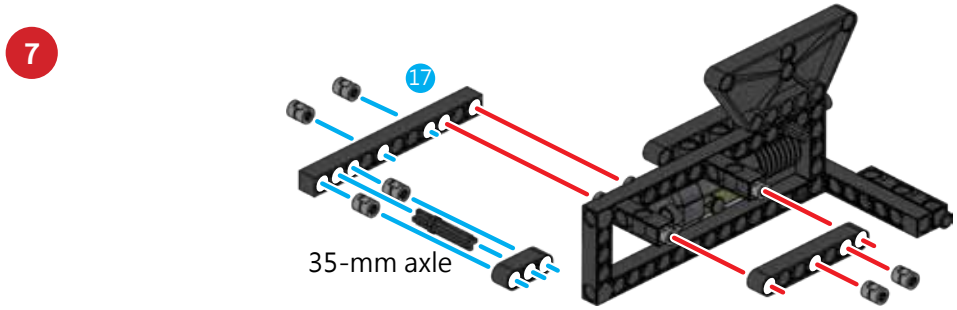

8

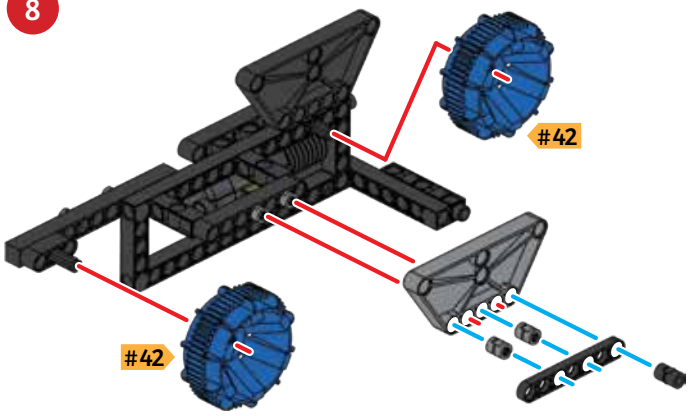

9

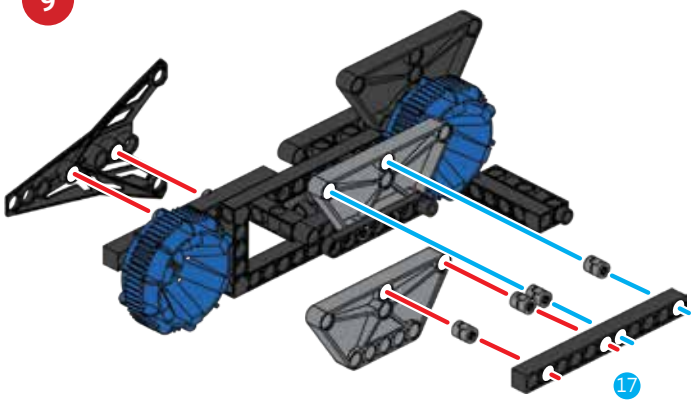

10

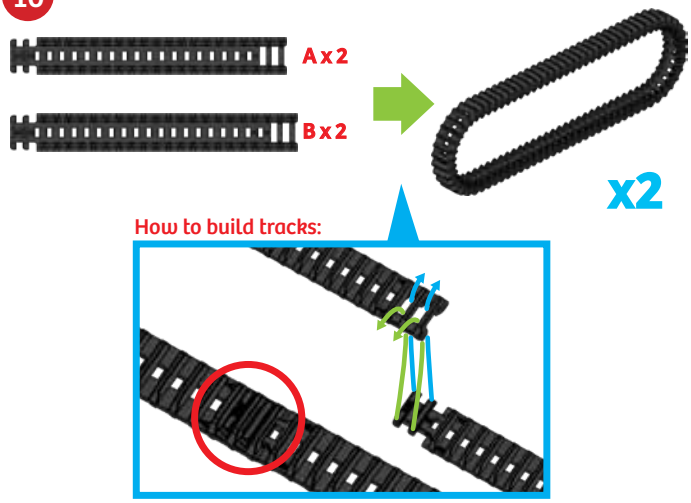

11

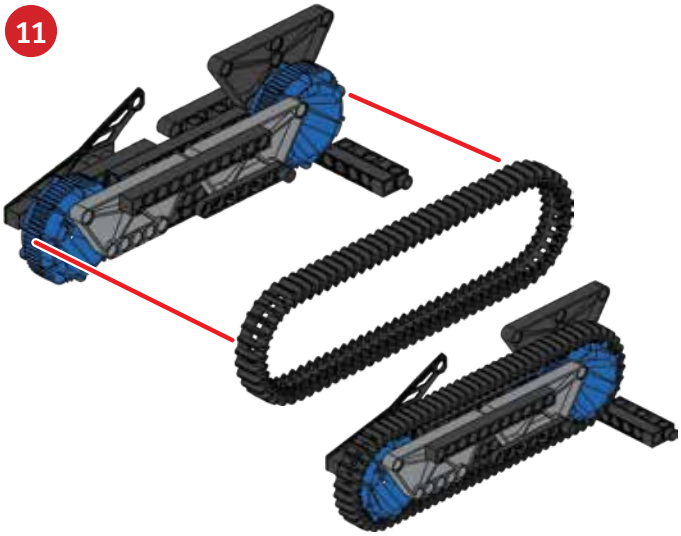

12

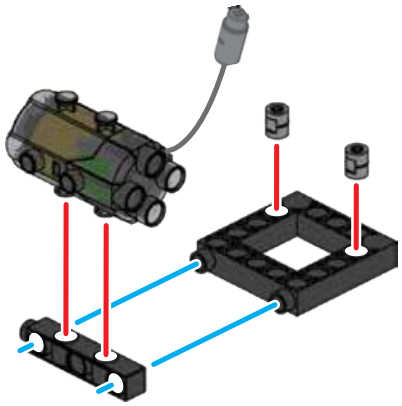

13

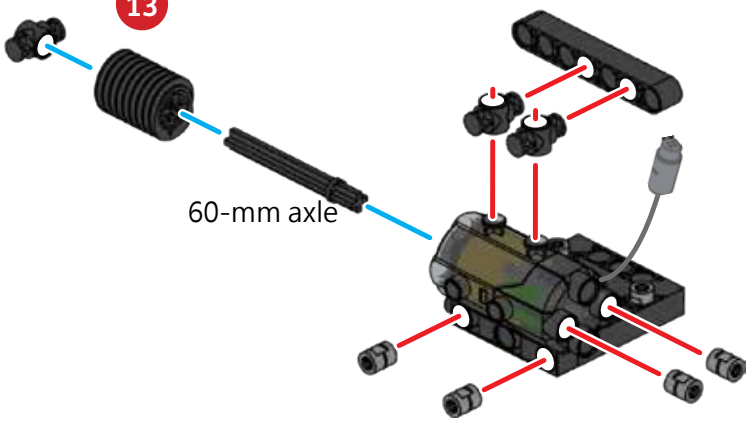

14

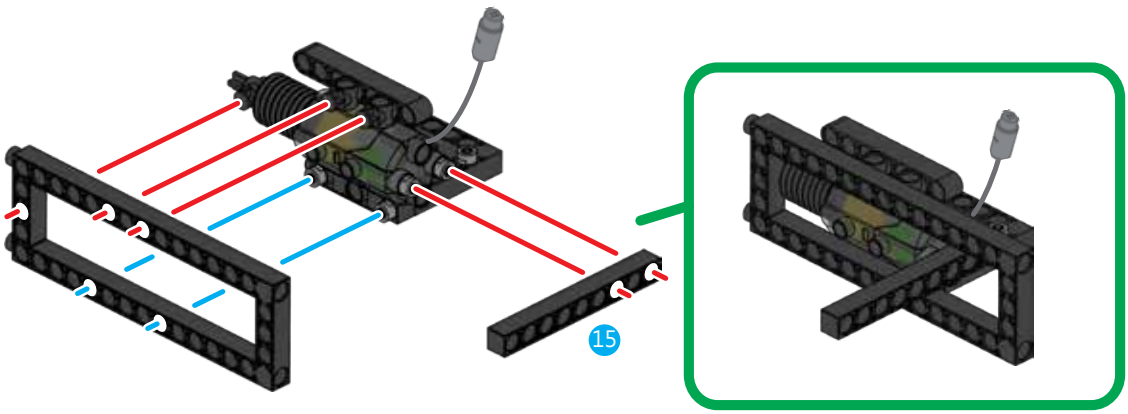

CONVEYOR BELT

15

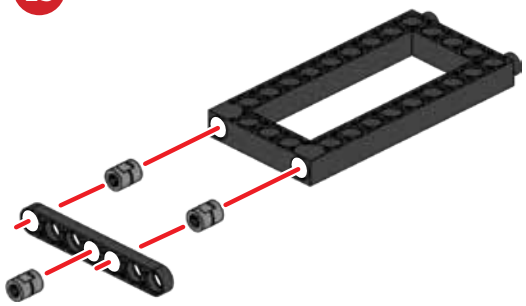

16

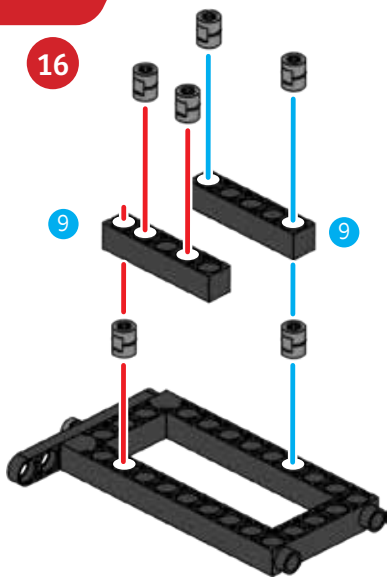

17

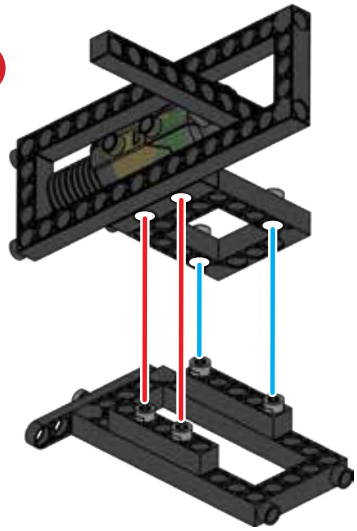

18

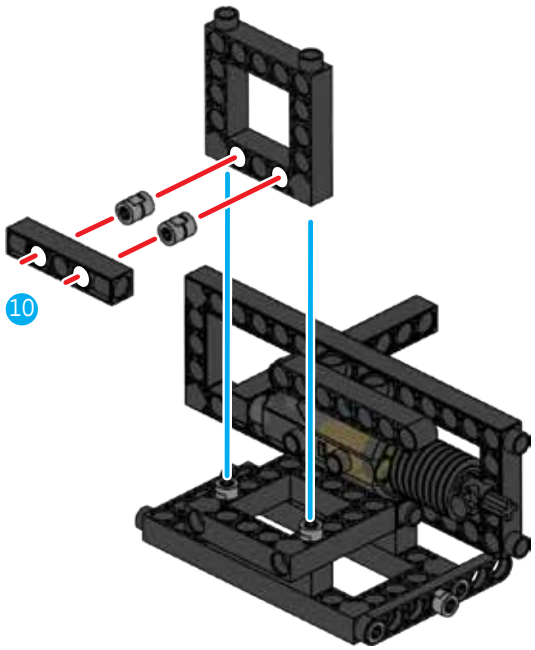

19

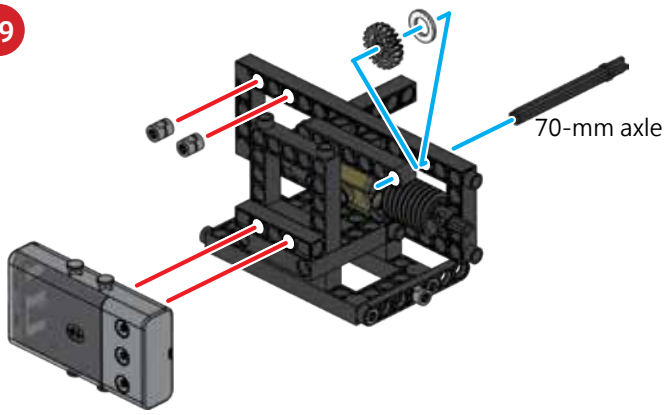

20

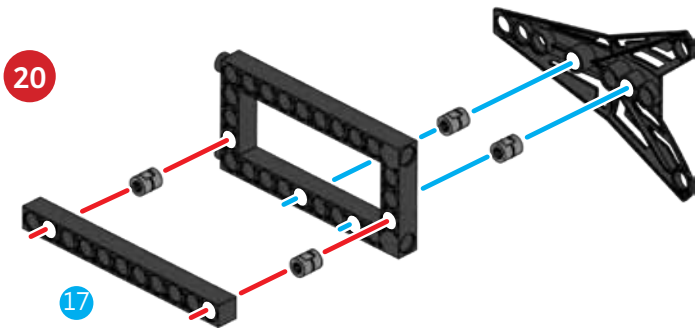

21

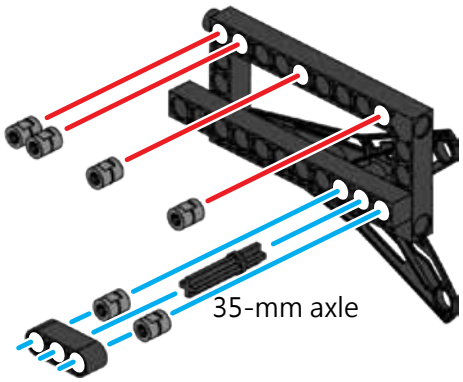

22

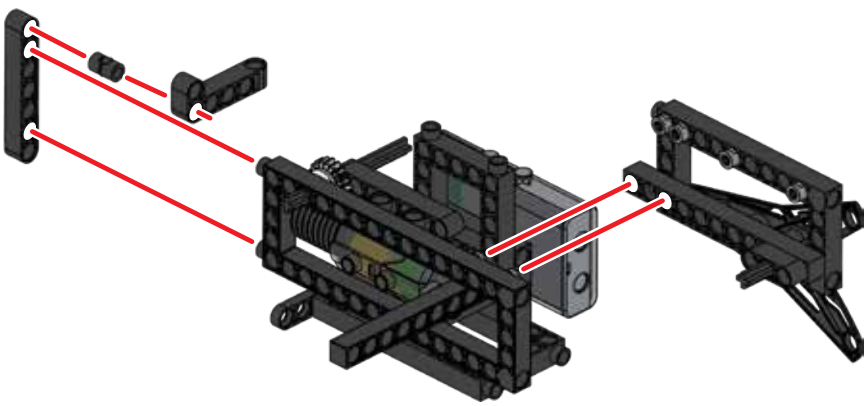

23

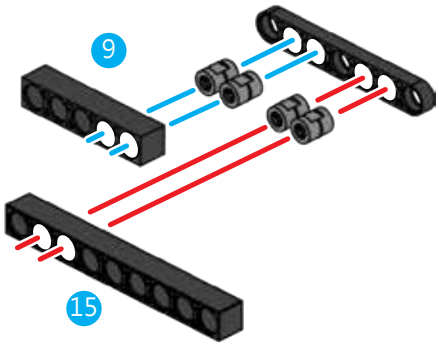

24

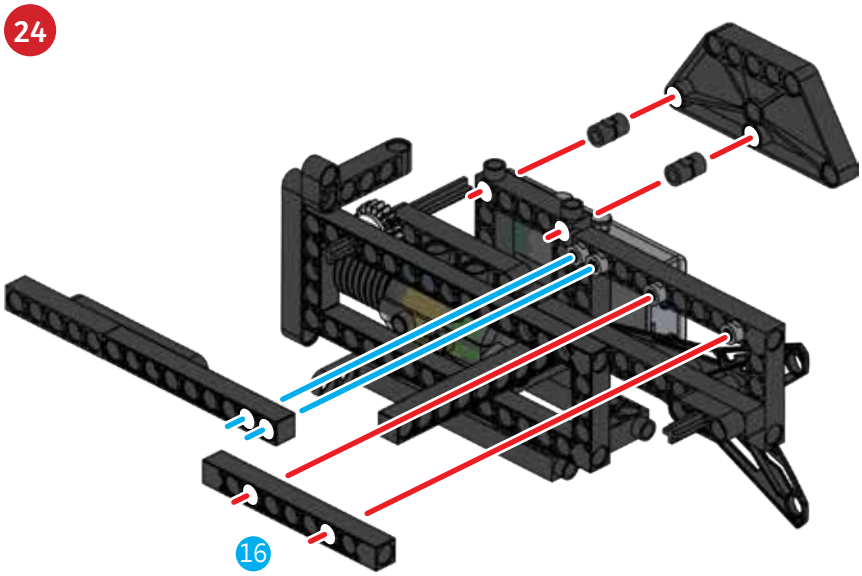

25

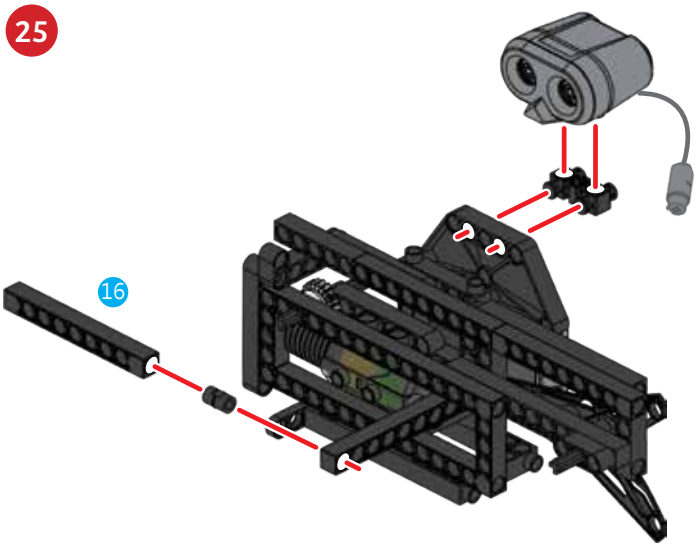

26

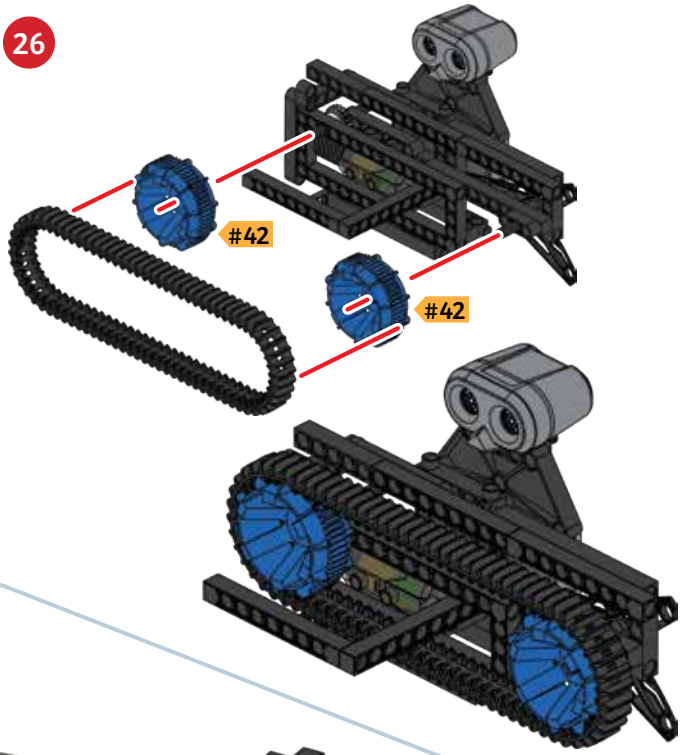

27

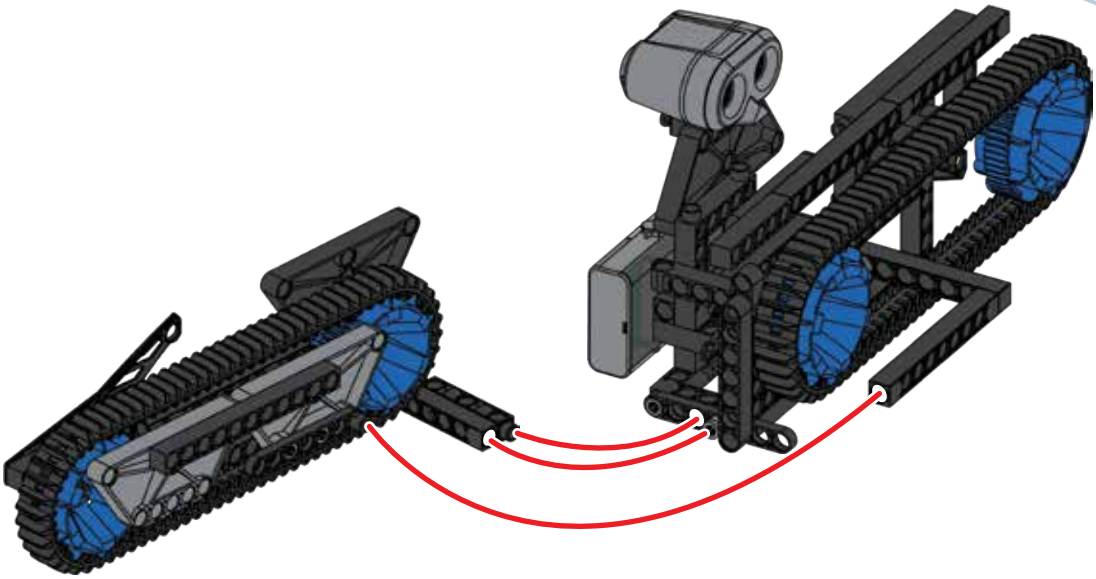

28

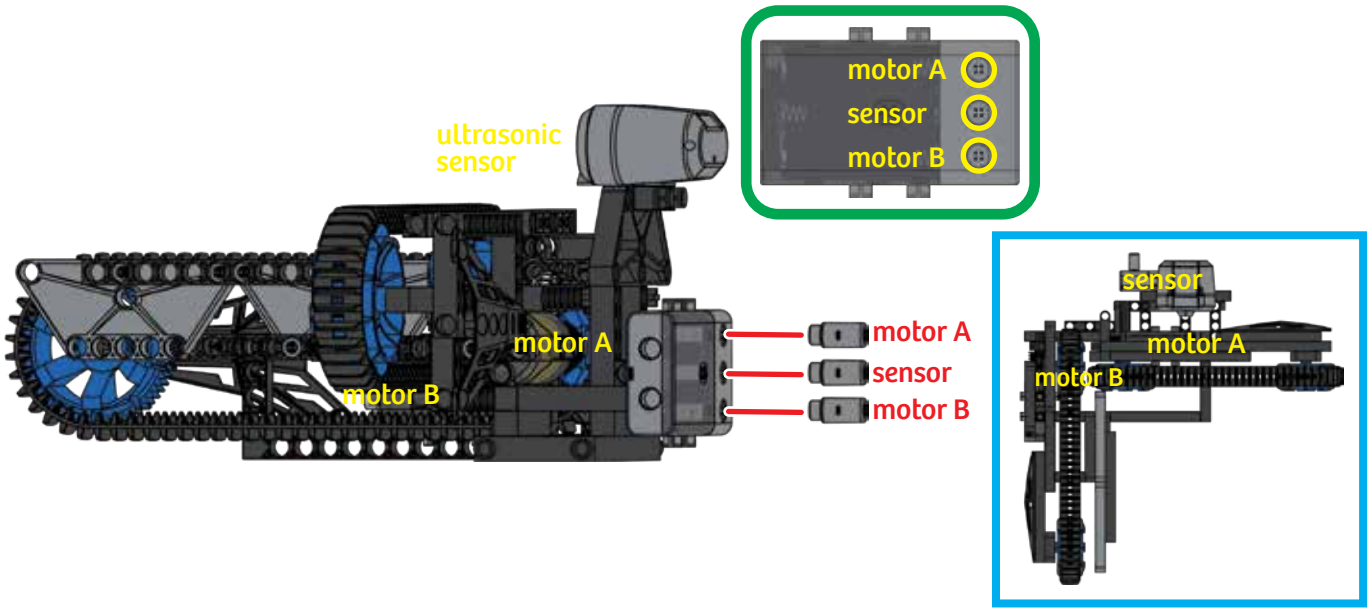

29

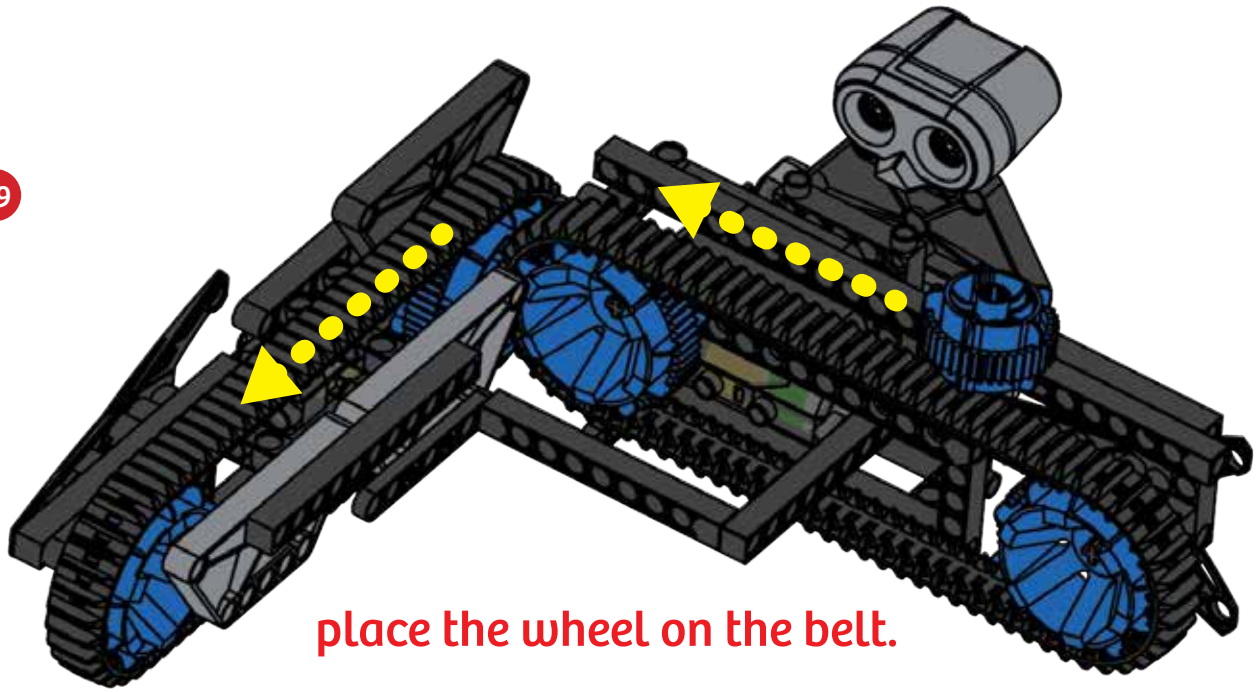

place the wheel on the belt.

Done!

PROGRAMMING

SAMPLE PROGRAM FOR THE CONVEYOR BELT

The conveyor belt is able to move objects along its two belts, changing the direction in which the object is moving in the process. Before running the program, place a large wheel frame on the belt in front of the ultrasonic sensor. When the program is run, the belt will move the large wheel frame forward, pause for a second, and then continue to move the large wheel frame onto the second track. The second track will then move the large wheel frame forward until it falls off.

This program is preloaded in the app under Program 22. Test it out and write down how the robot behaves for each program segment below.

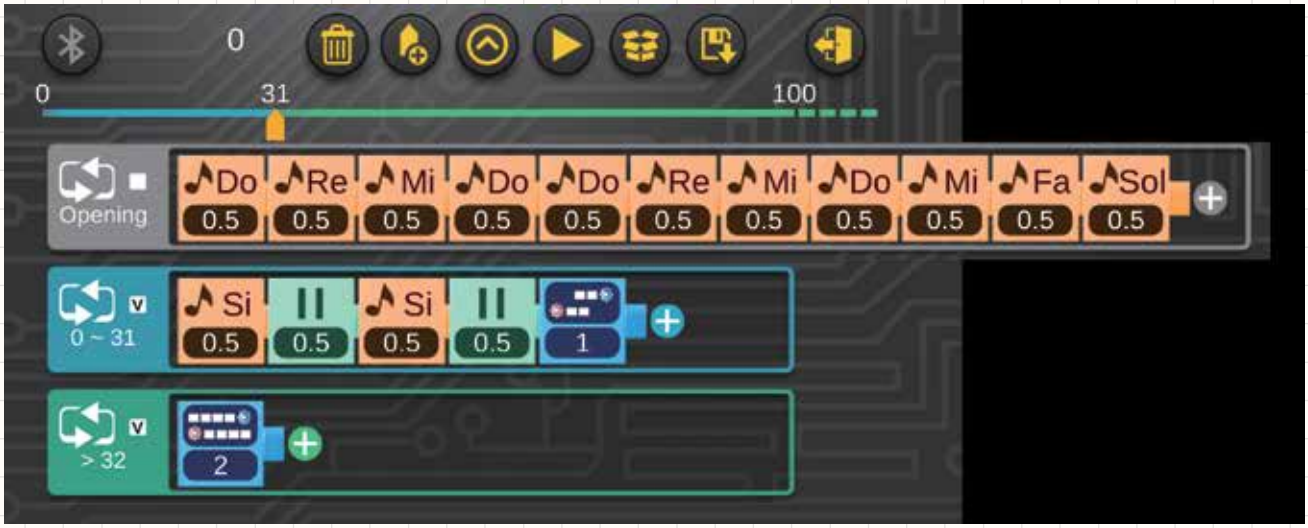

PROGRAMMING NOTES

DEMO PROGRAM:

Program 22

OPENING SEGMENT:

SEGMENT 0-31:

SEGMENT >32:

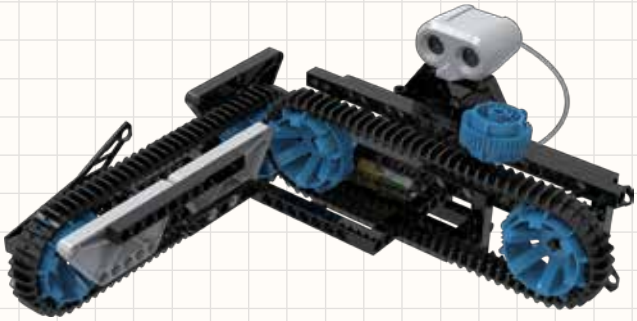

ESCALATOR

DIGITAL ASSEMBLY INSTRUCTIONS

See page 3 for download info.

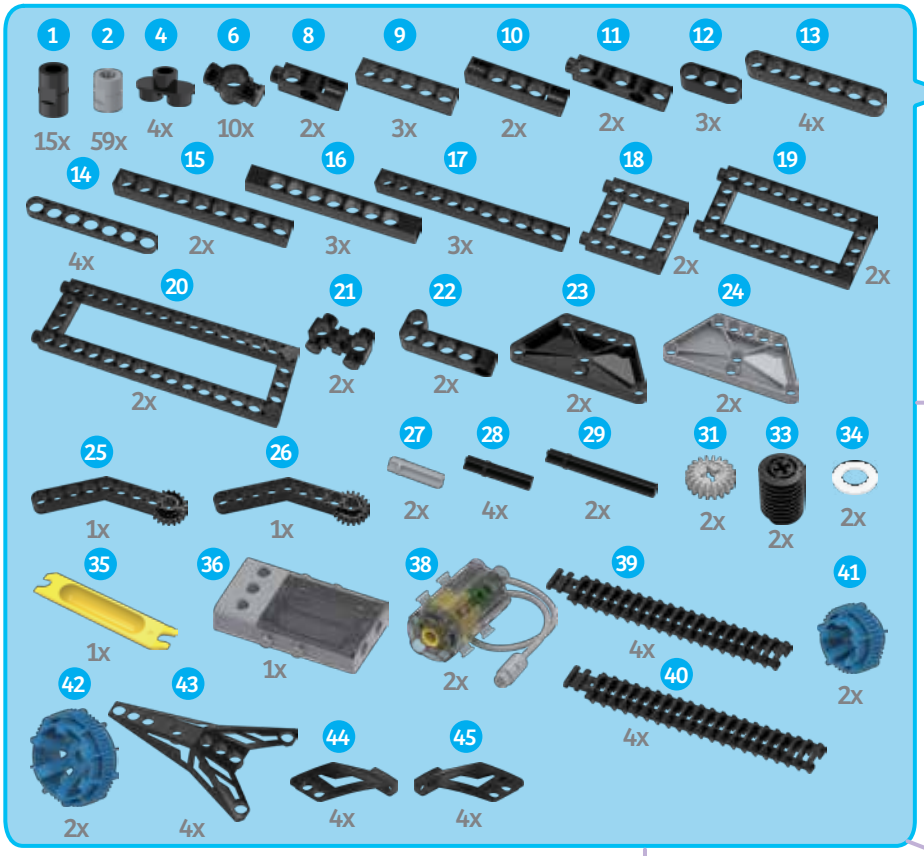

1

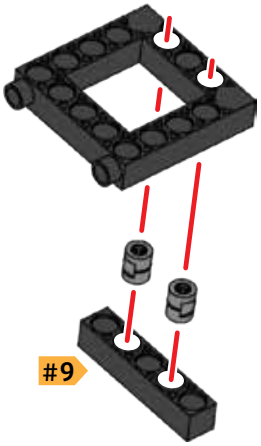

2

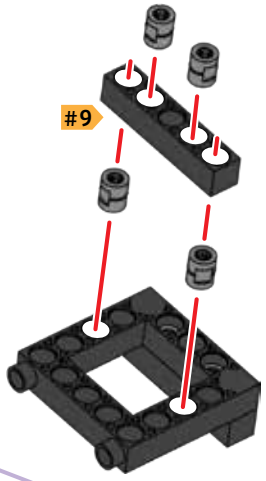

3

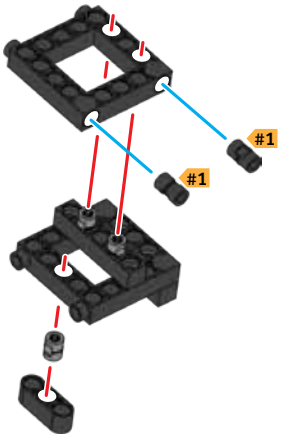

4

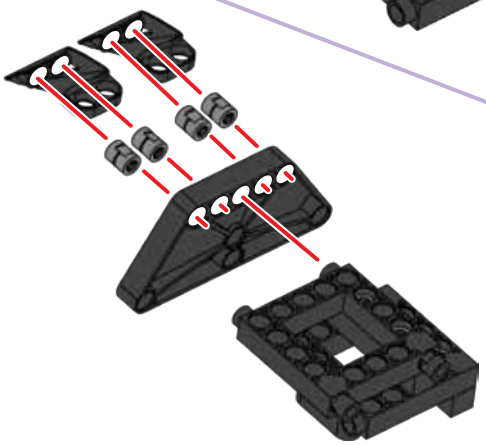

5

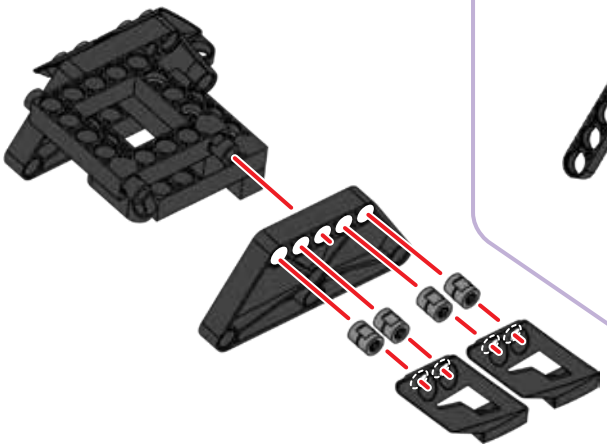

6

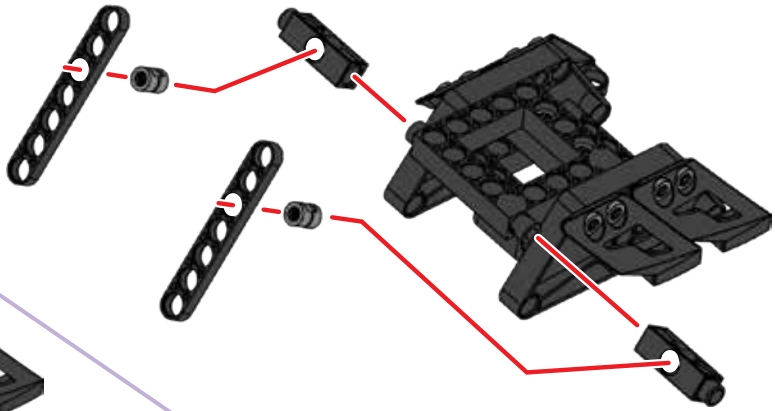

7

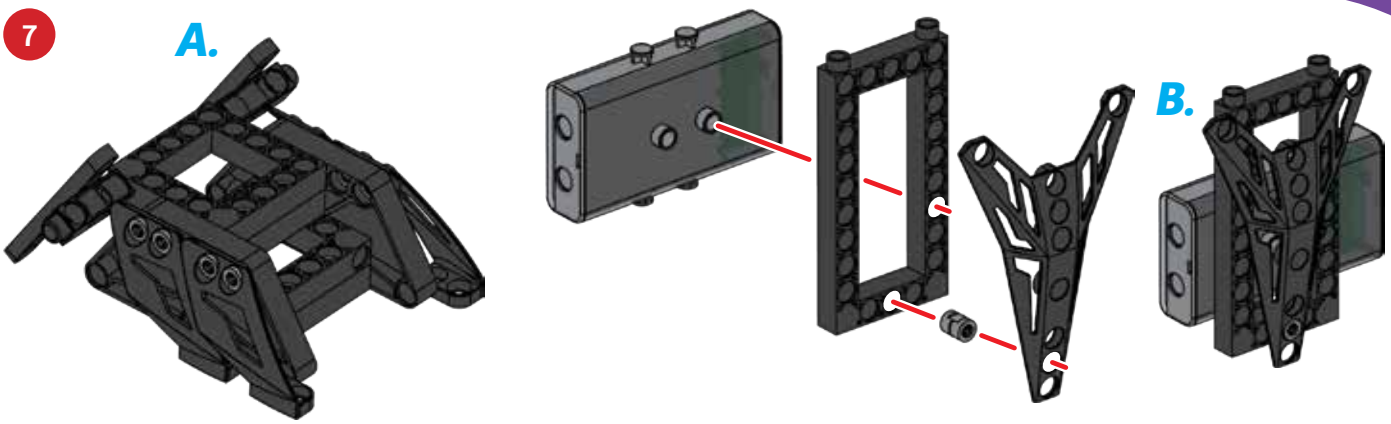

8

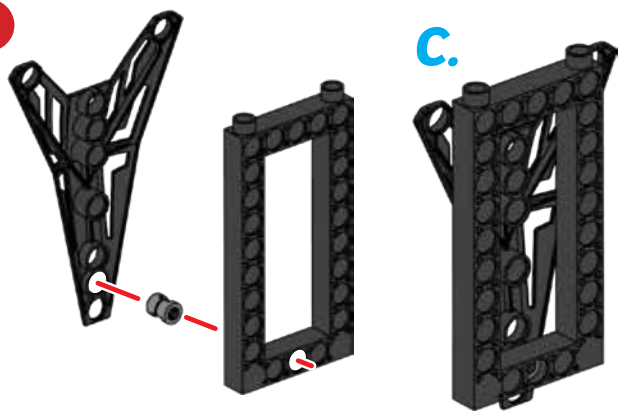

9

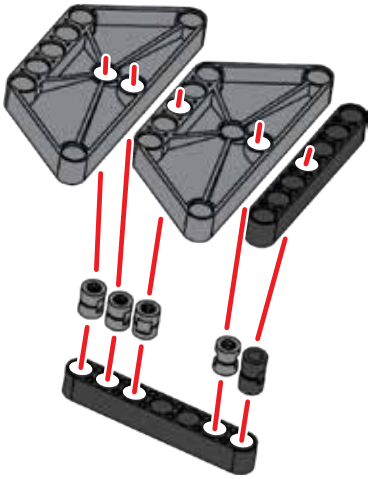

10

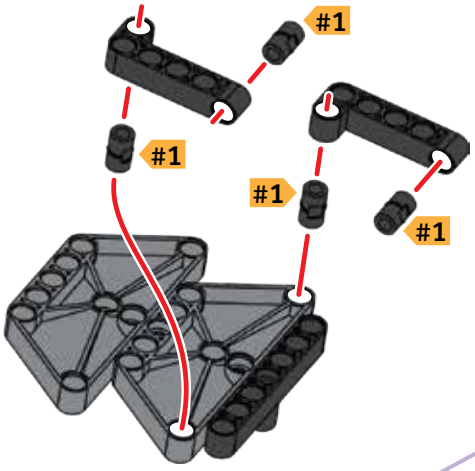

11

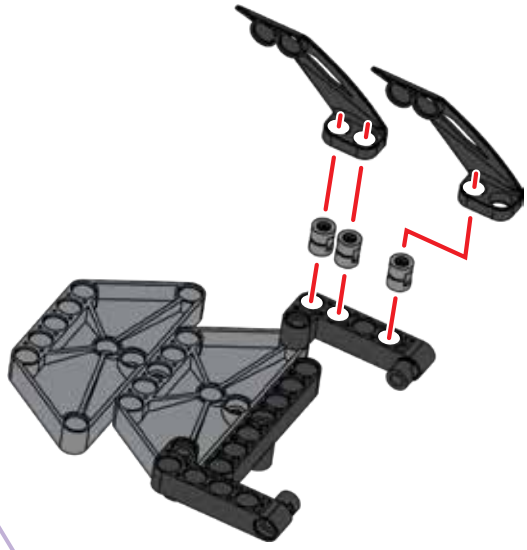

12

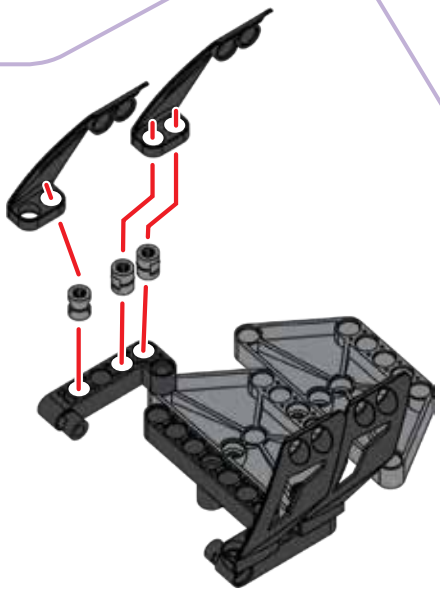

ESCALATOR

13

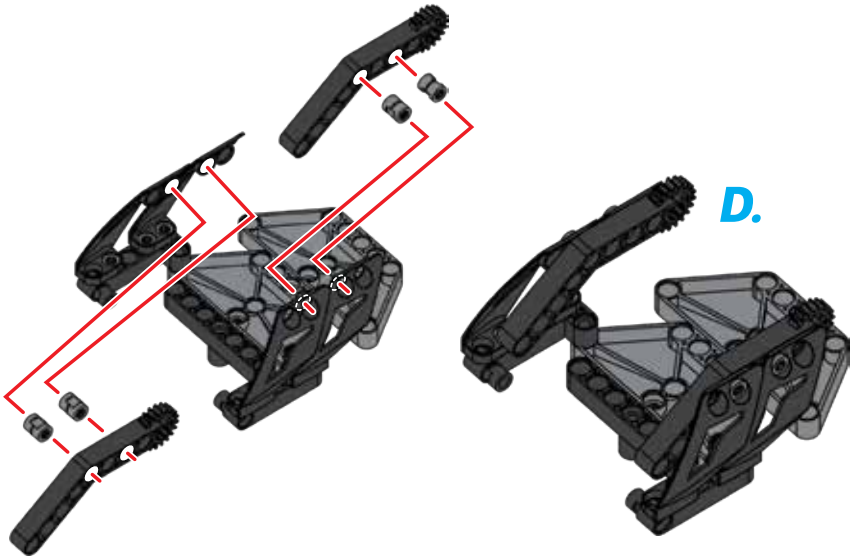

14

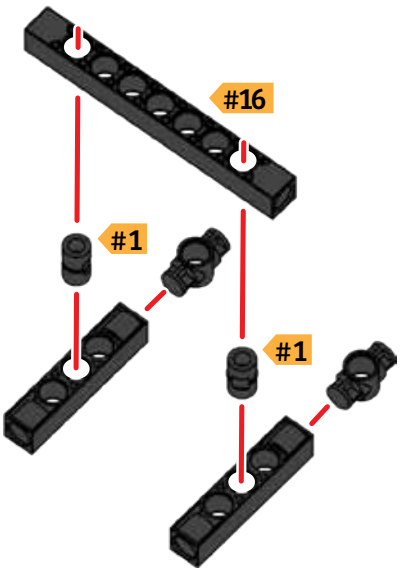

15

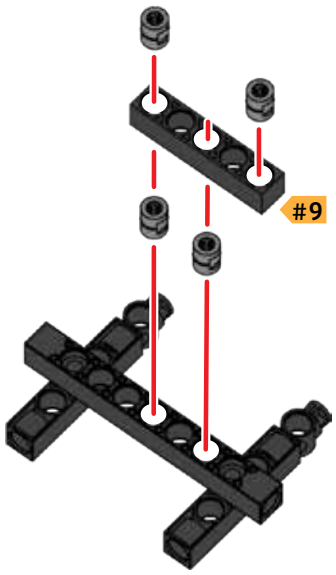

16

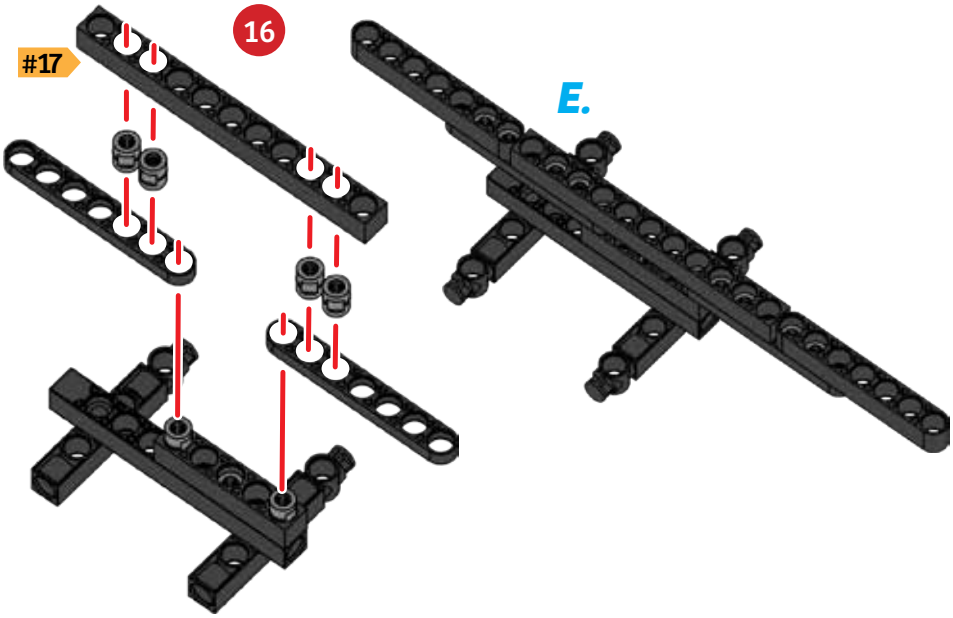

17

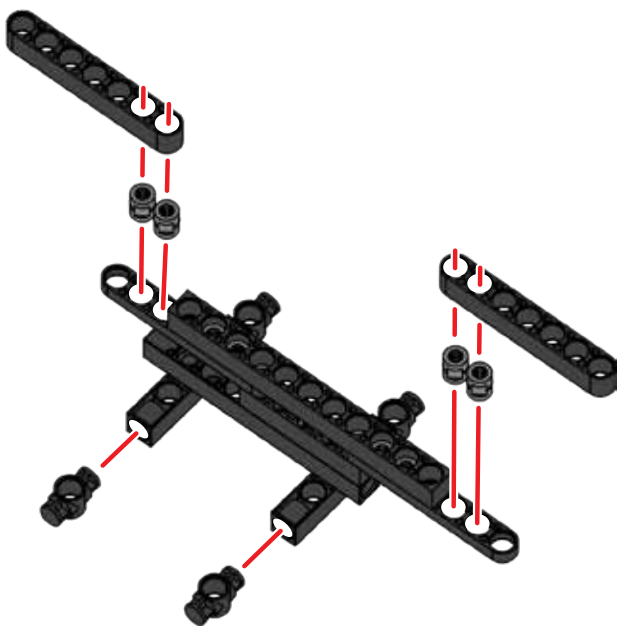

18

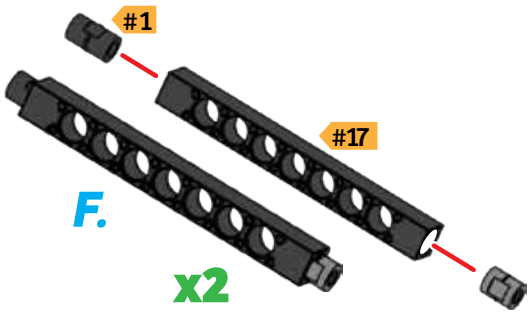

19

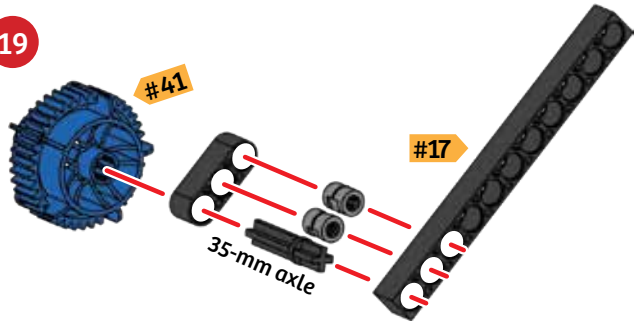

20

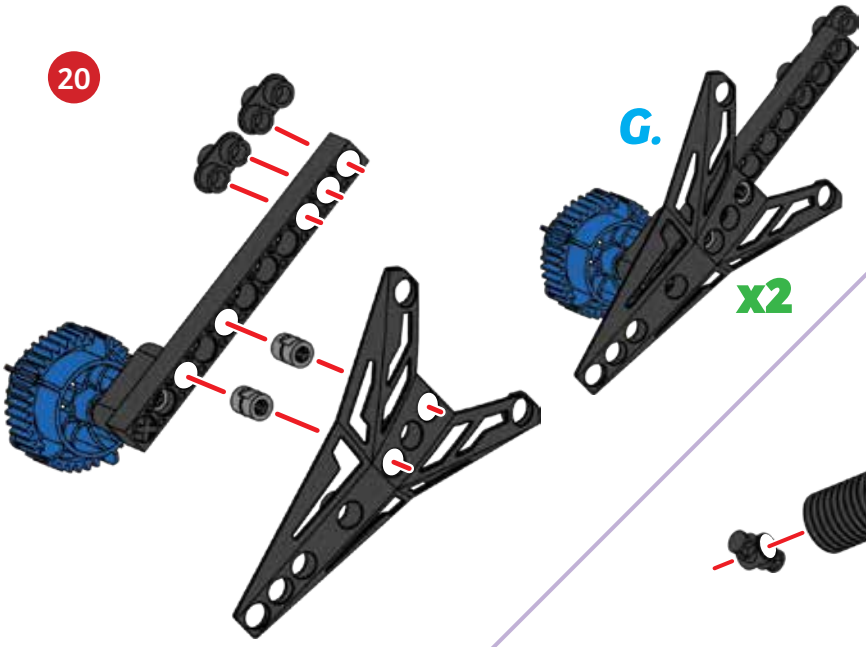

21

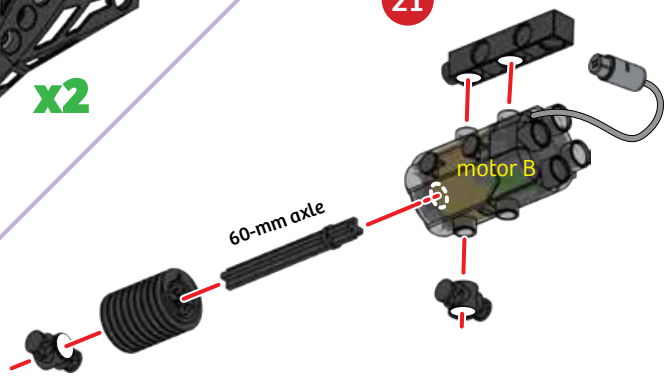

22

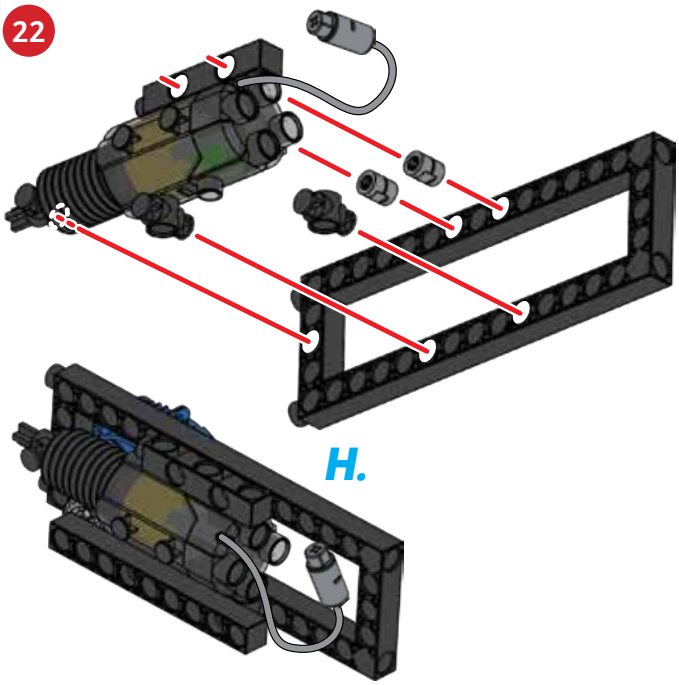

23

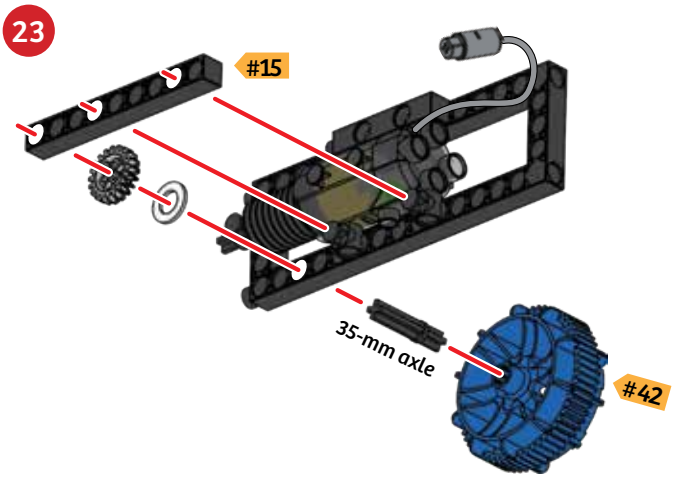

24

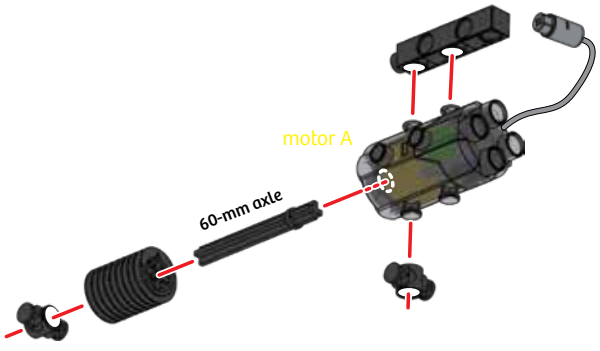

25

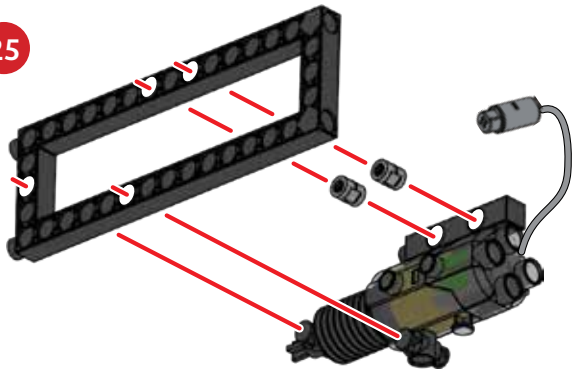

26

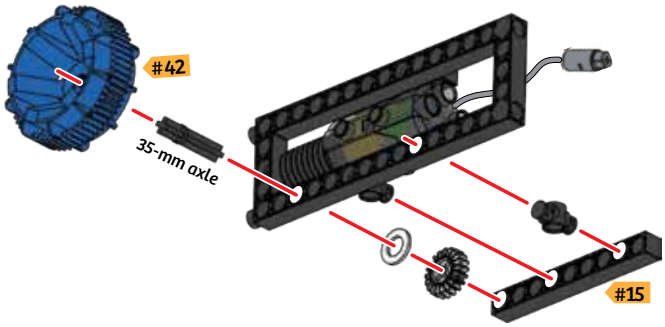

ESCALATOR

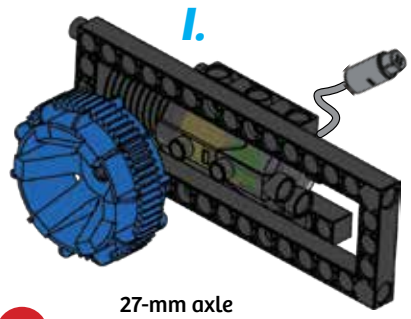

27

27-mm axle

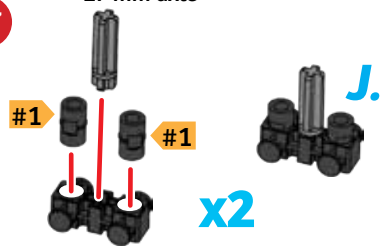

28

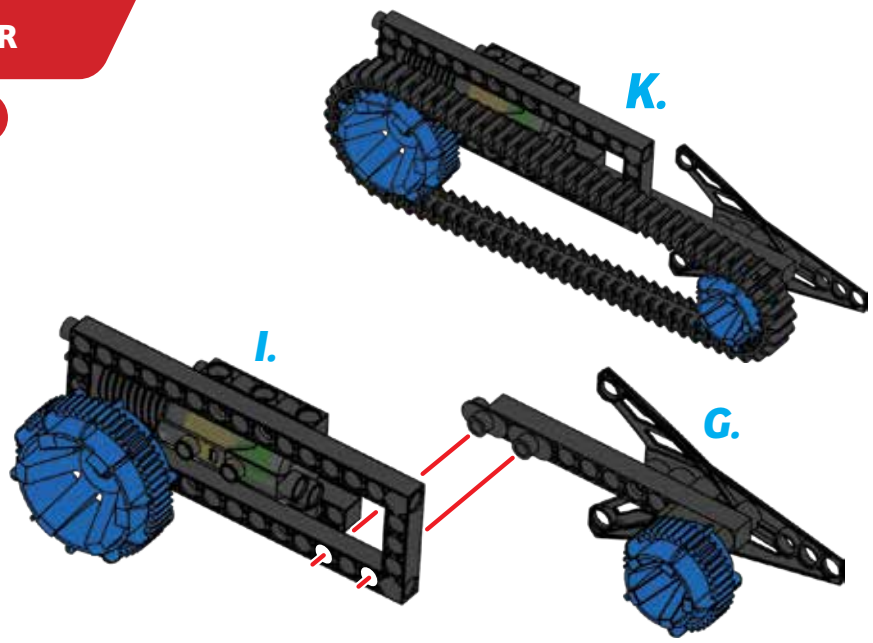

29

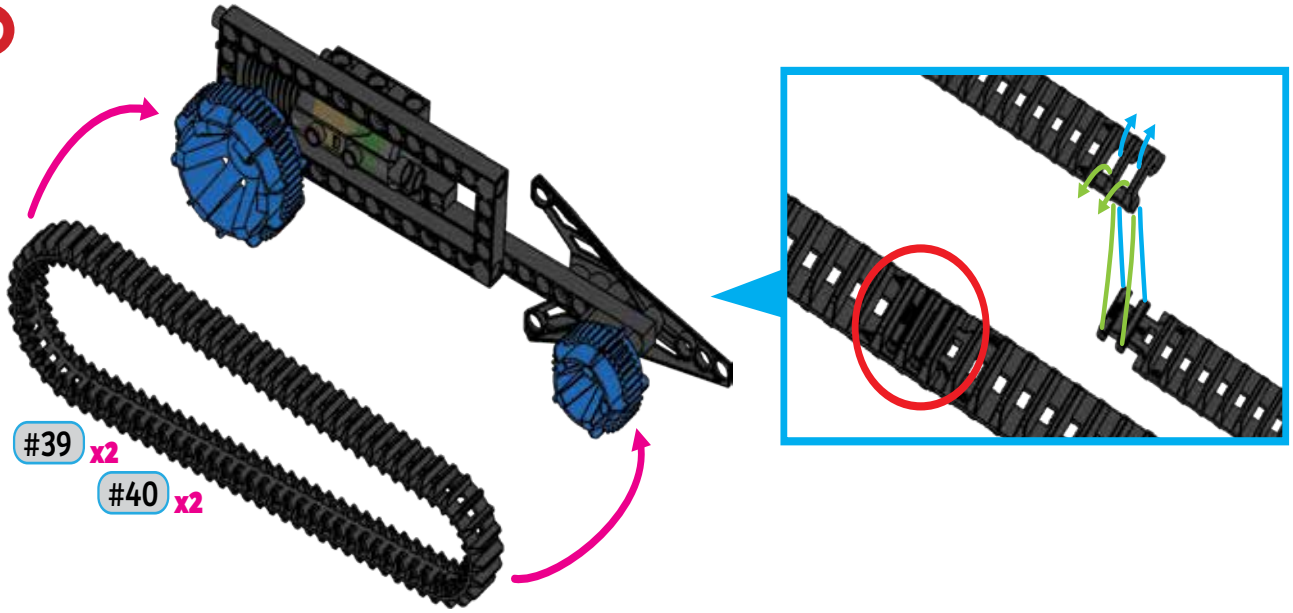

30

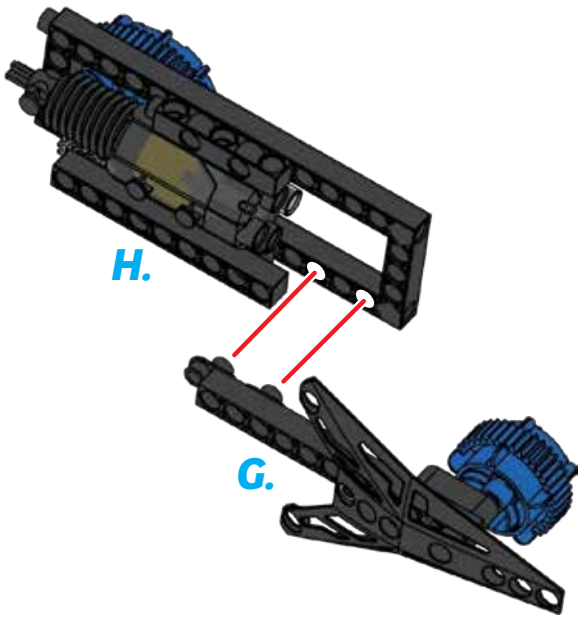

31

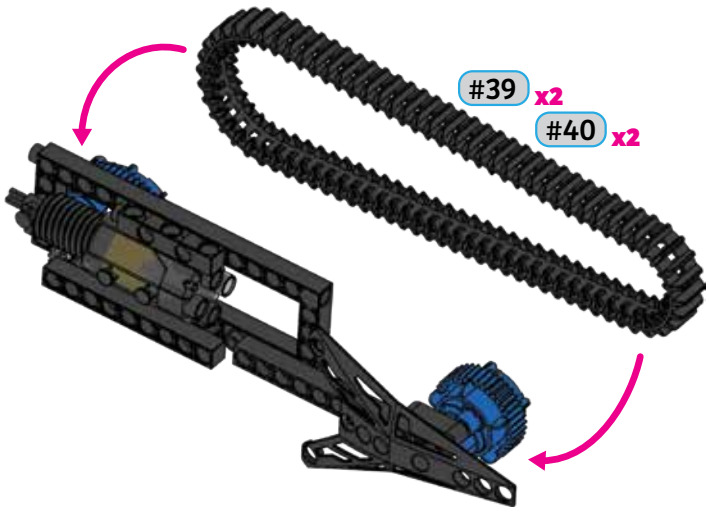

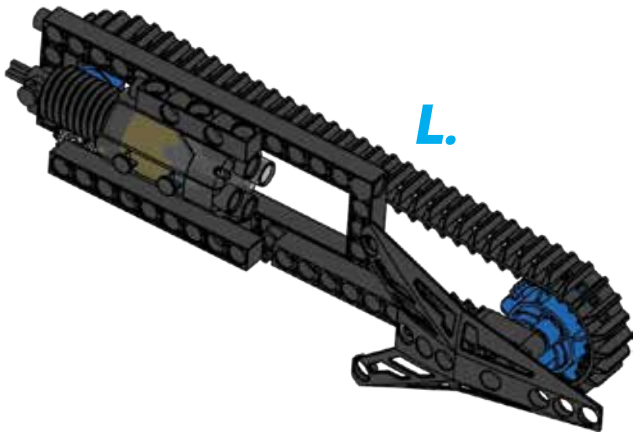

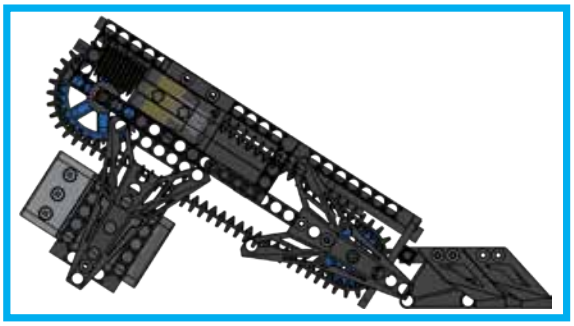

32

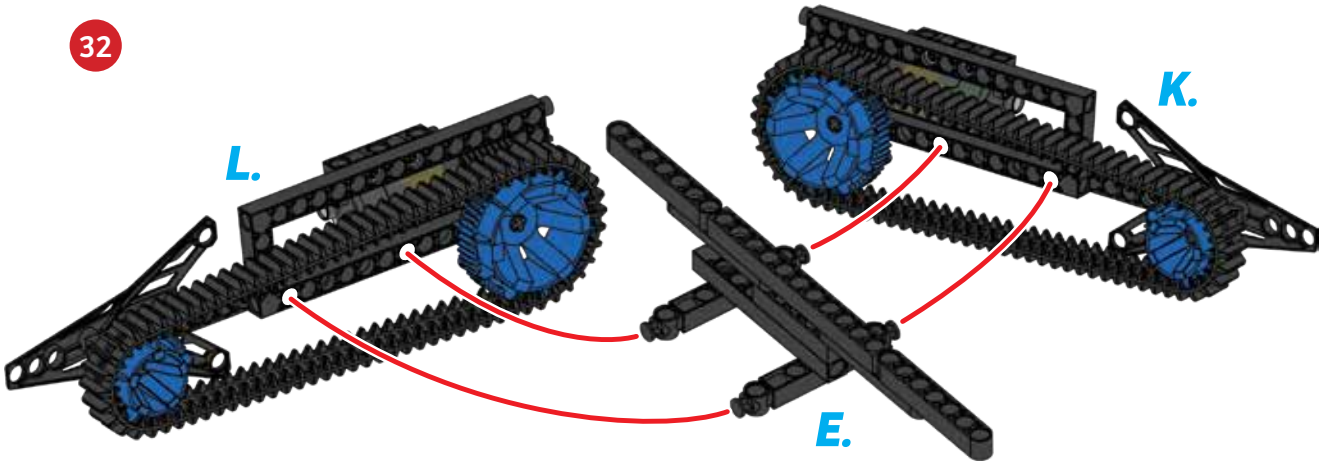

33

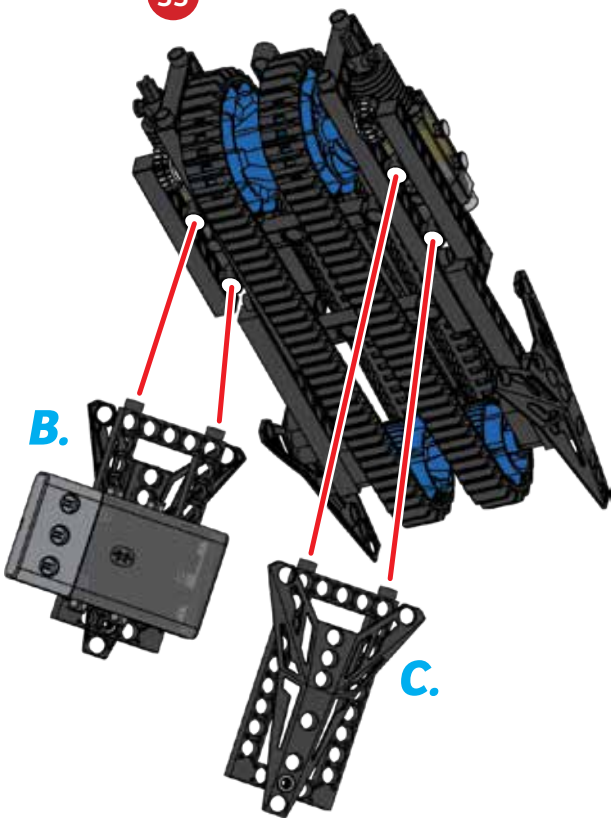

34

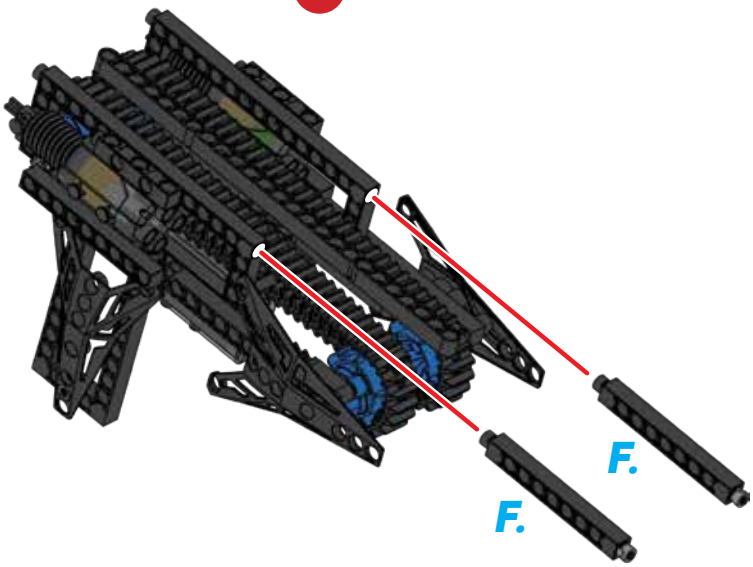

35

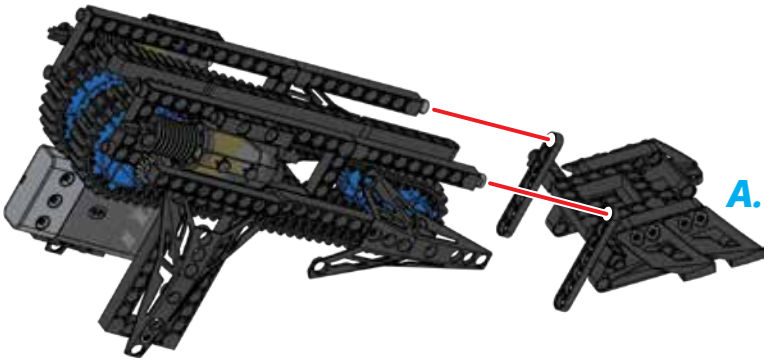

36

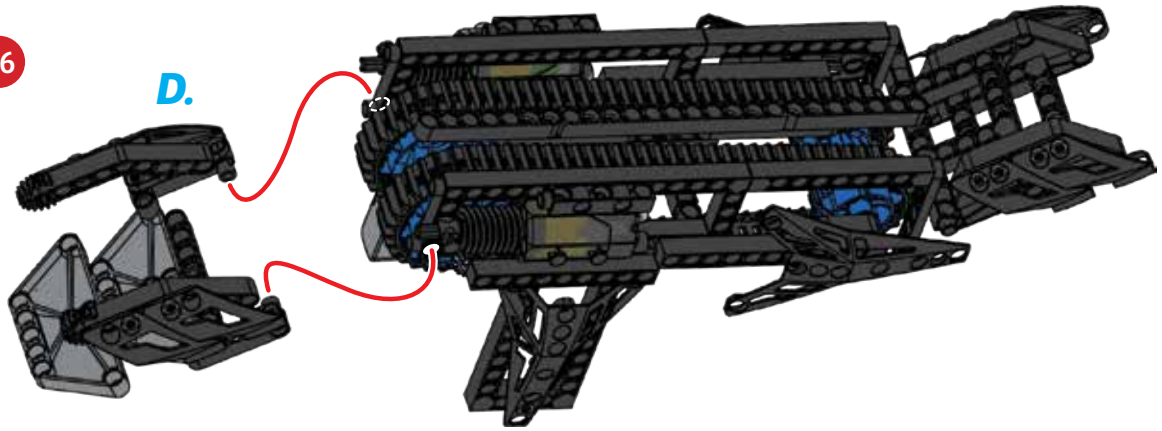

37

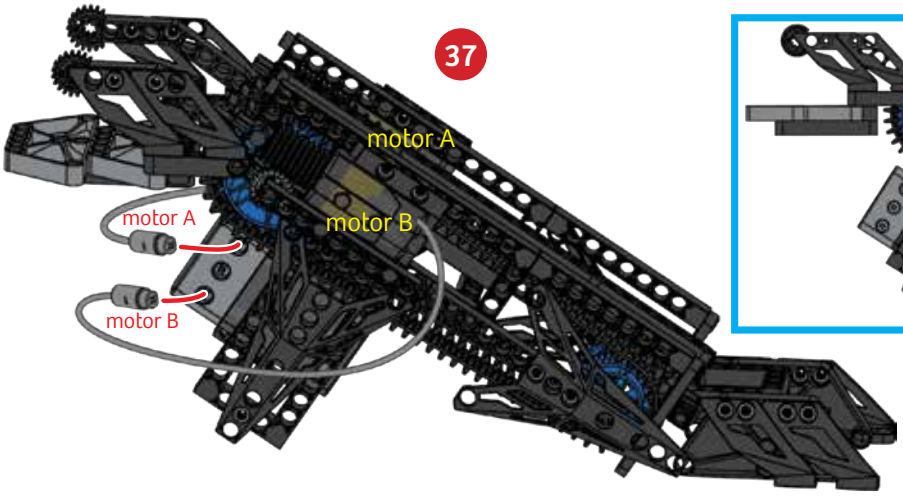

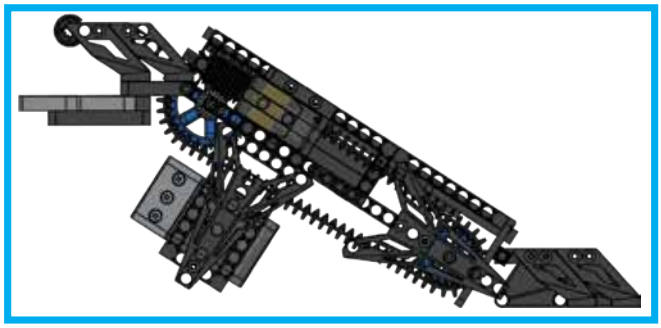

38

Done!

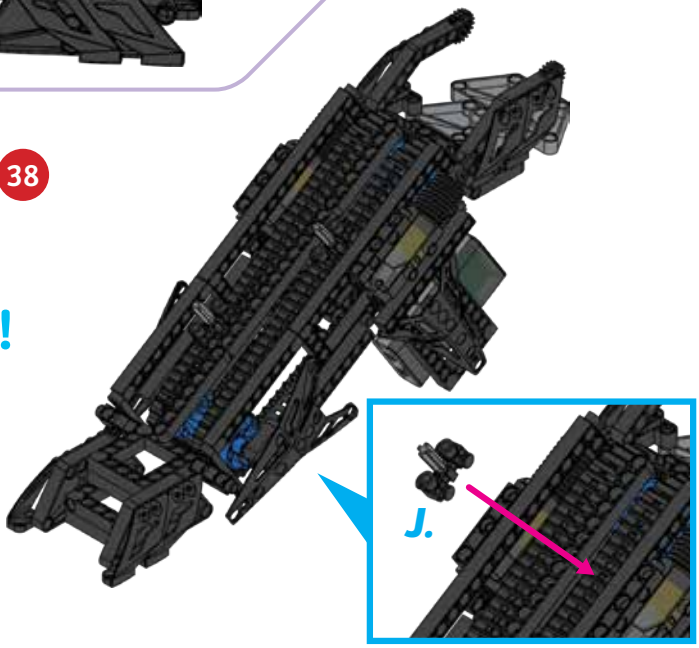

PROGRAMMING

SAMPLE PROGRAM FOR THE ESCALATOR

The escalator is able to move objects up and down its tracks just like an escalator in a building. Before running the program, place one "Part J" on the bottom section of both tracks. When the program is run, the tracks will turn, moving the part with them.

This program is preloaded in the app under Program 23. Test it out and write down how the robot behaves for each program segment below.

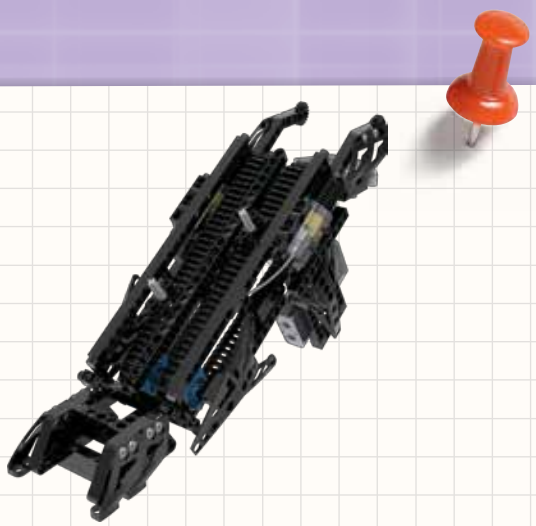



PROGRAMMING NOTES

DEMO PROGRAM:

Program 23

OPENING SEGMENT:

SEGMENT 0-30:

SEGMENT >31:

TUNDRA EXPLORER

DIGITAL ASSEMBLY INSTRUCTIONS

See page 3 for download info.

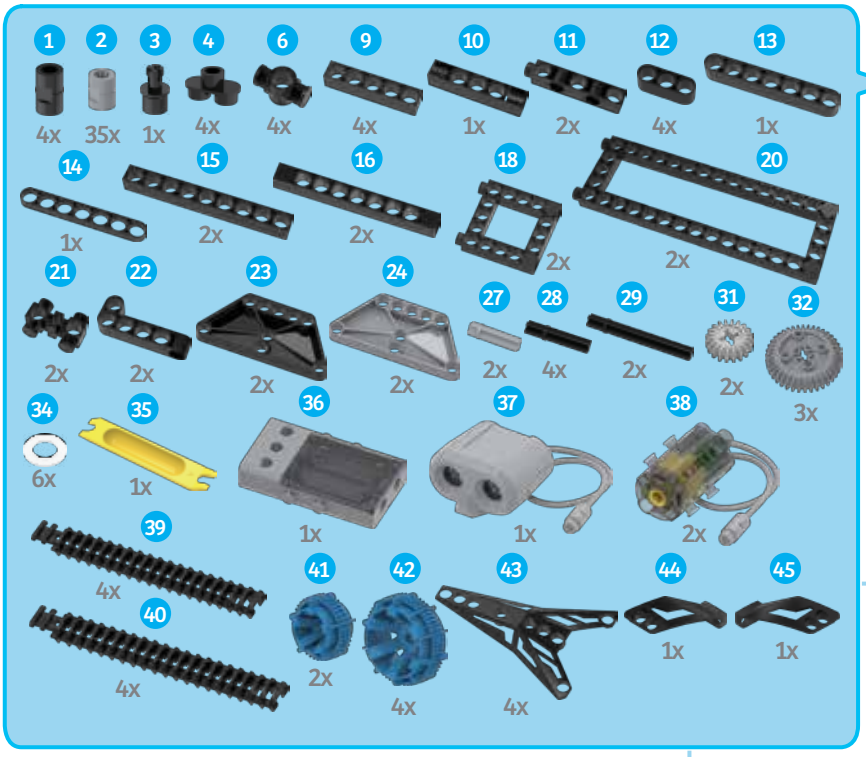

1

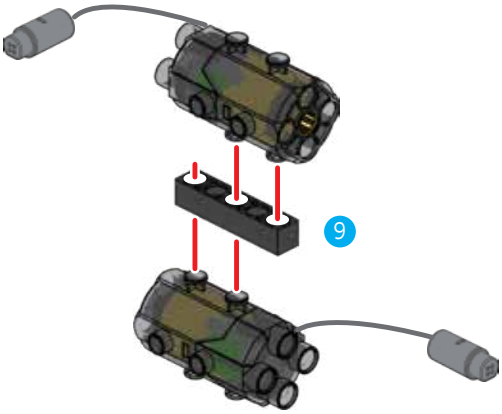

2

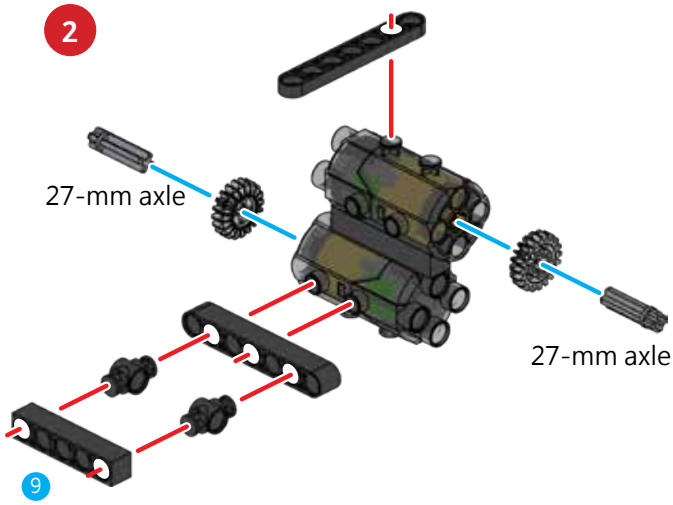

3

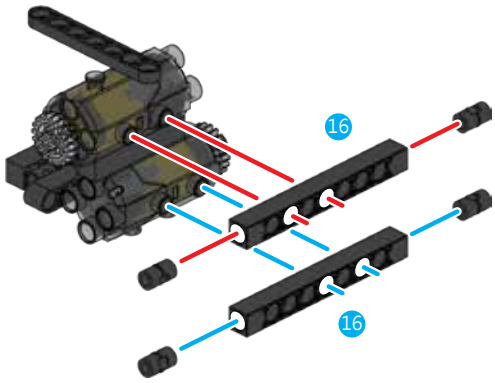

4

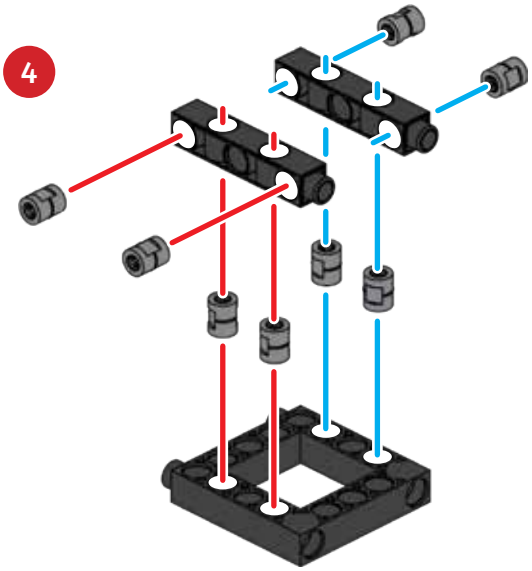

5

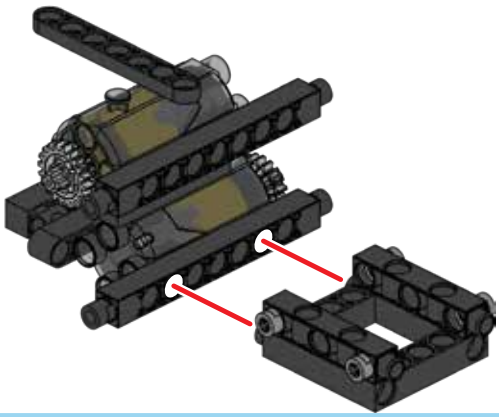

6

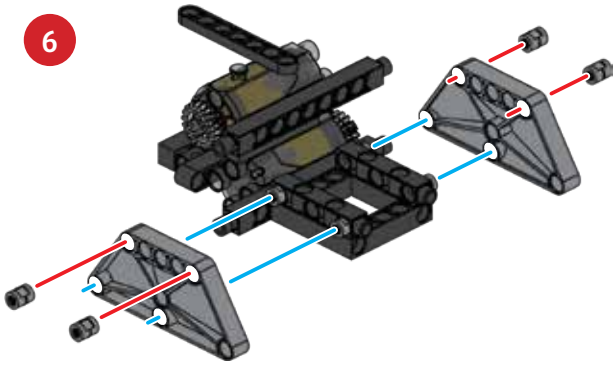

7

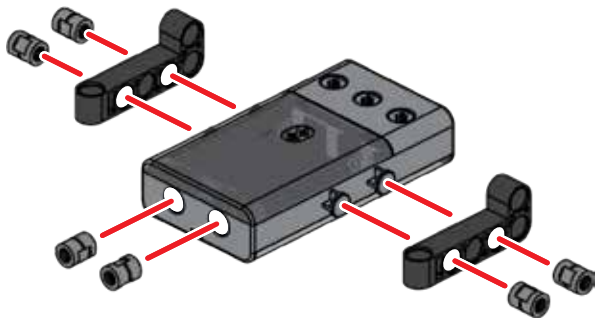

8

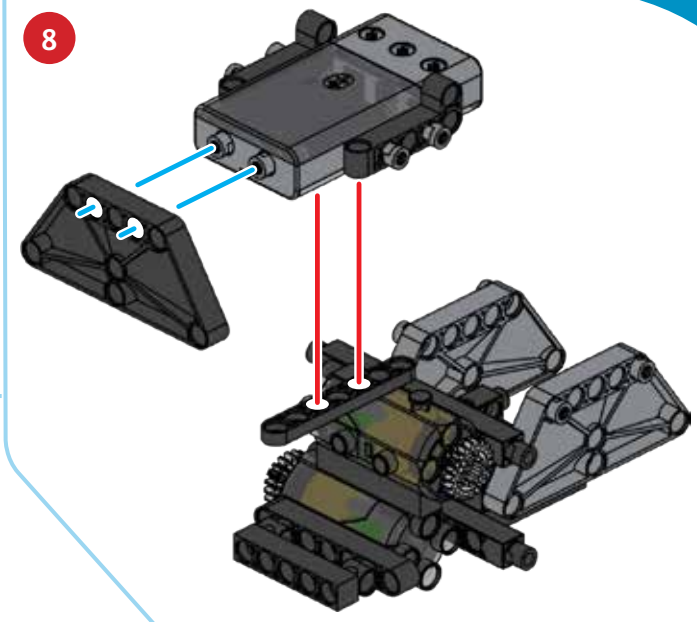

9

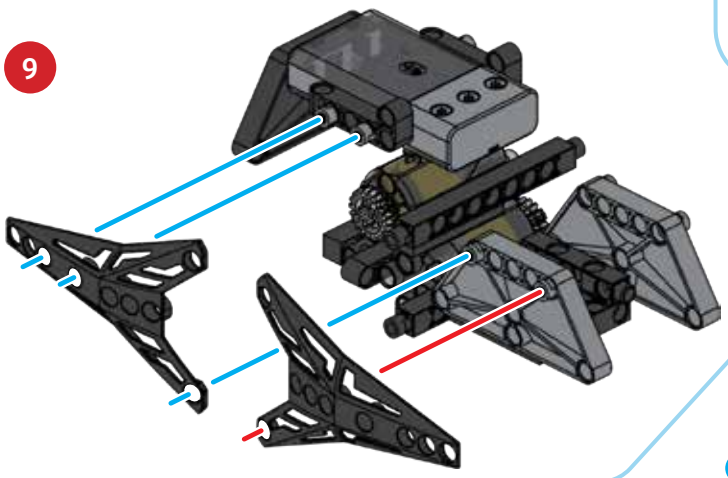

10

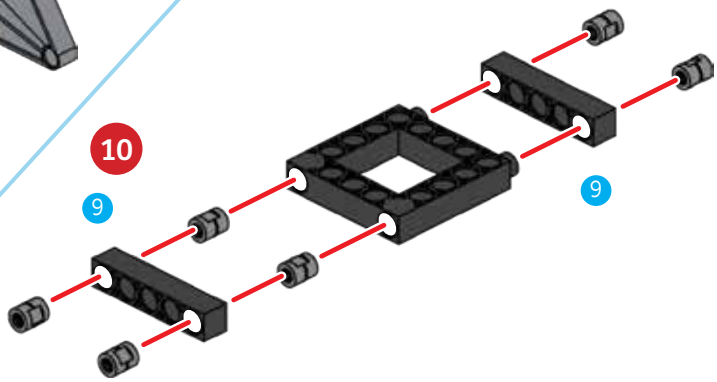

11

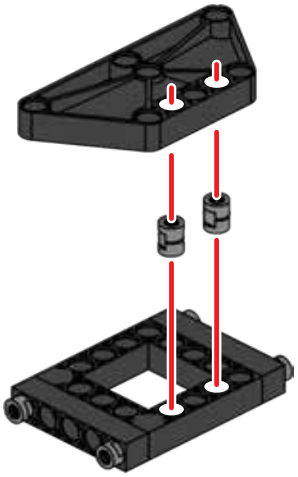

12

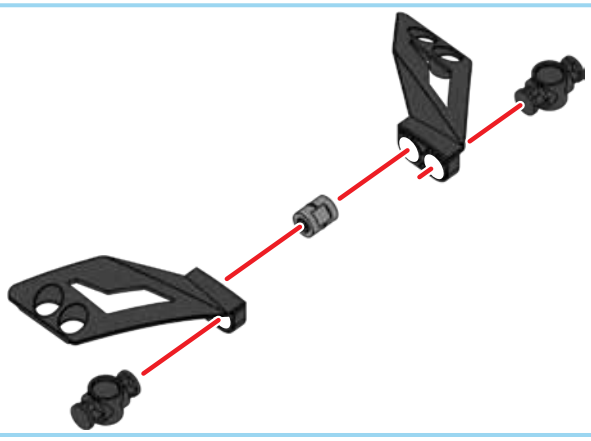

13

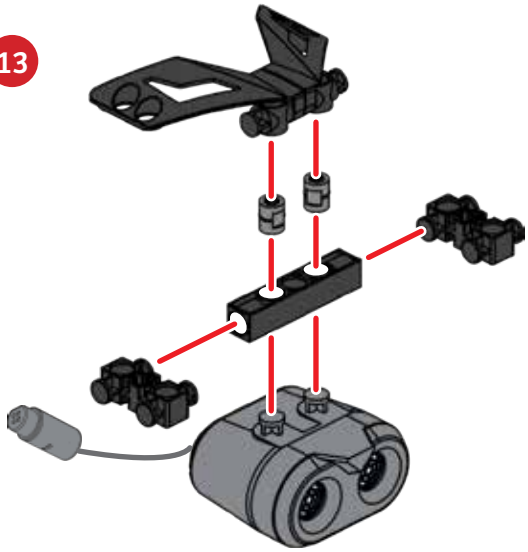

14

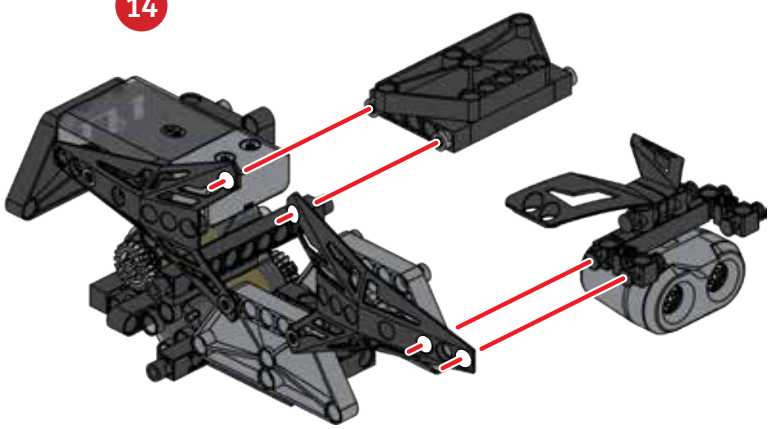

15

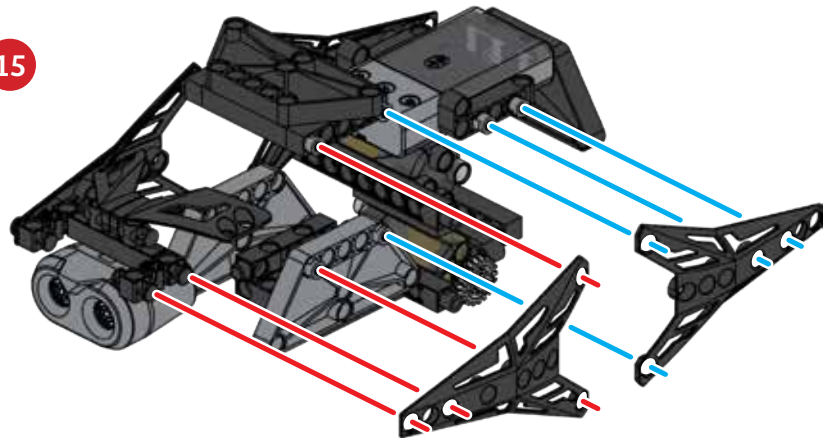

16

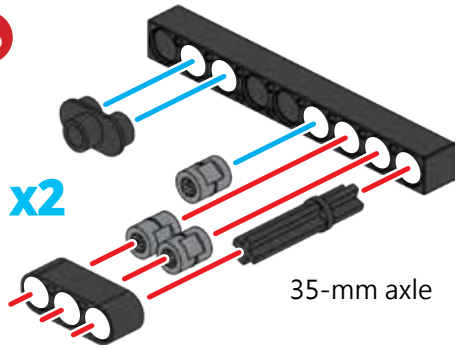

17

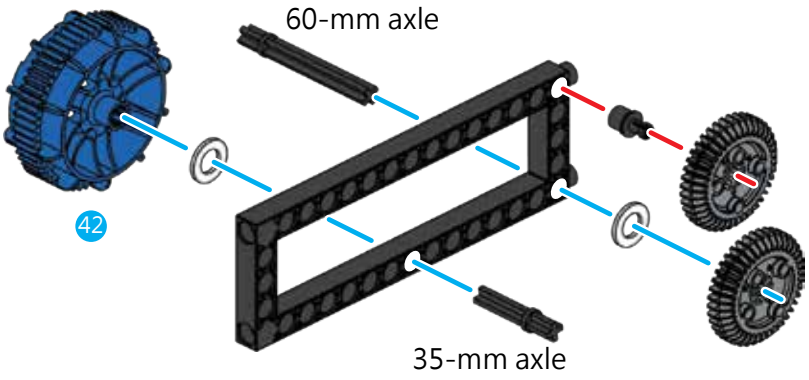

18

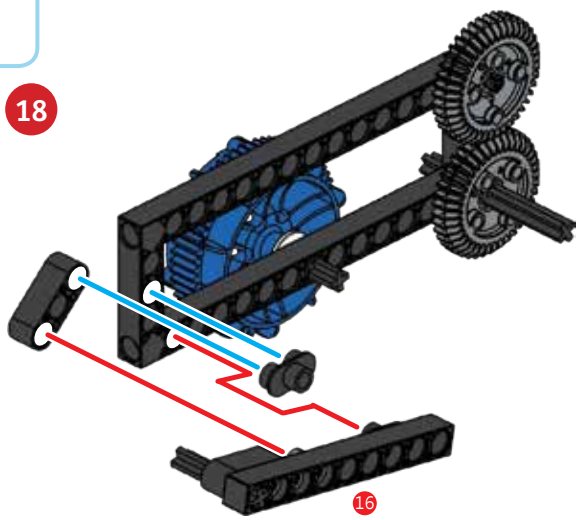

19

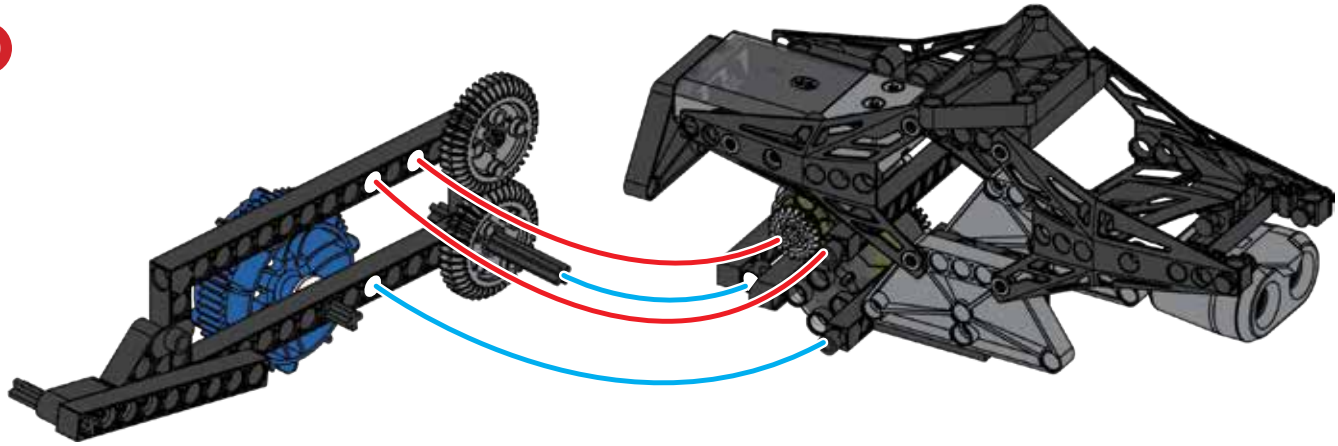

20

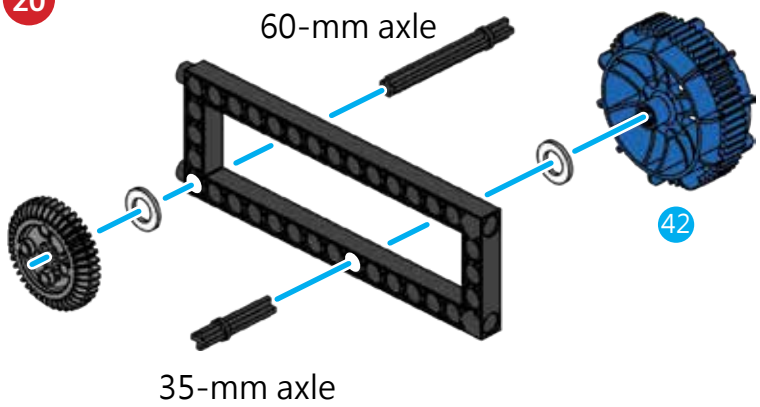

21

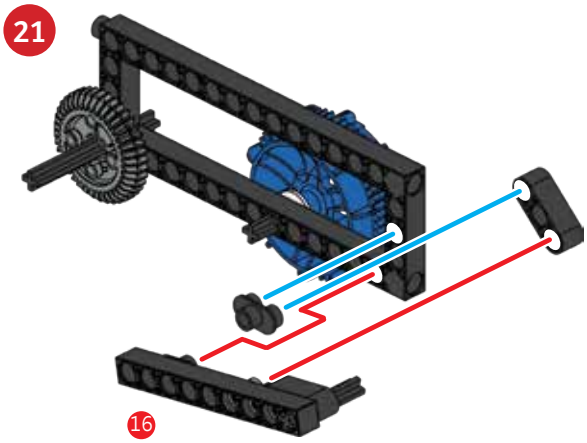

22

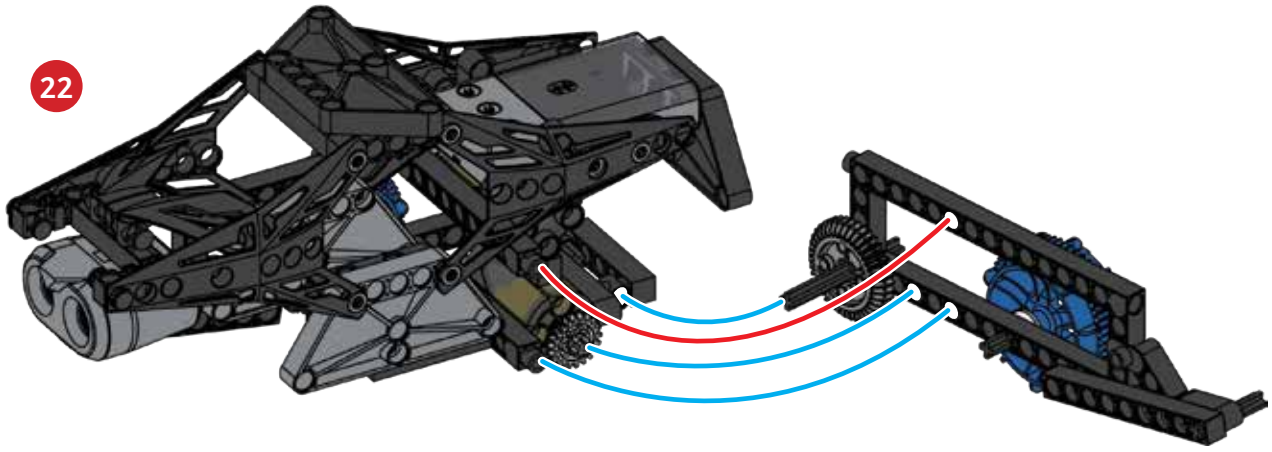

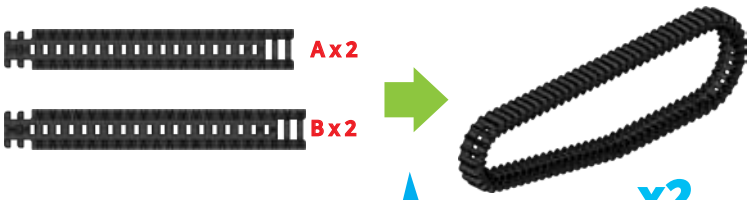

23

How to build tracks:

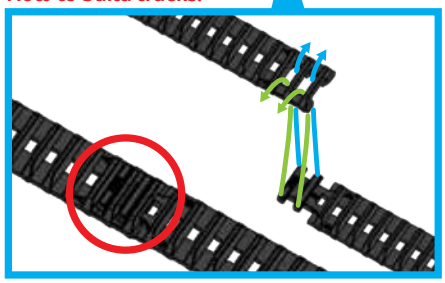

24

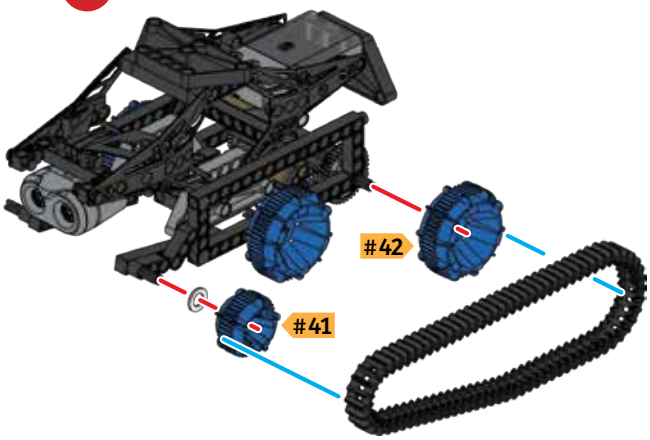

25

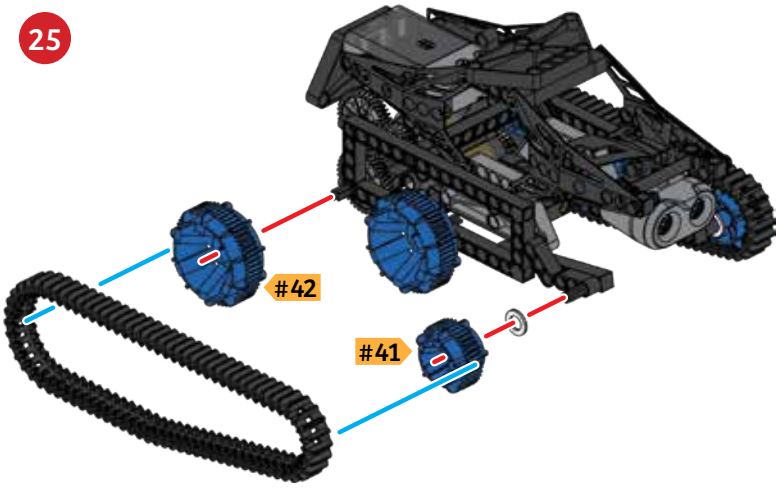

26

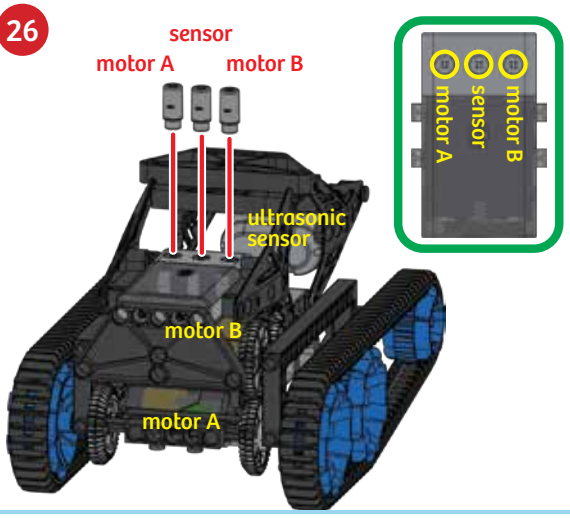

27

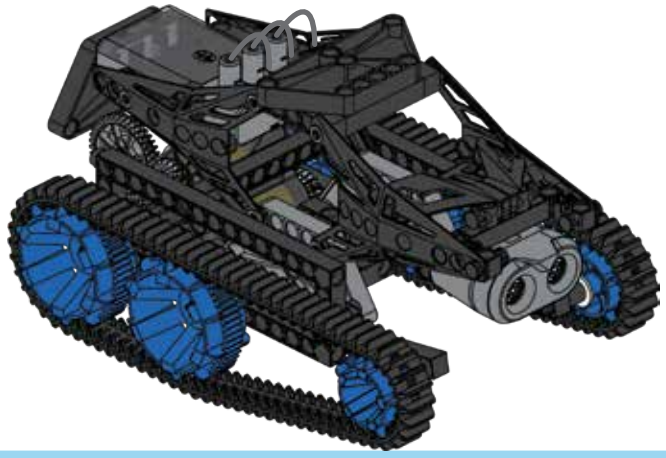

Done!

SAMPLE PROGRAM FOR THE TUNDRA EXPLORER

The tundra explorer is able to use its ultrasonic sensor to navigate obstacles. Set up an obstacle course using objects like books and toys in a long hallway for the tundra explorer to navigate through. When the program is run, the tundra explorer will move forward until its ultrasonic sensor detects an object. In response, the program will stop the motors, and then run the motors again in the reverse direction, backing the tundra explorer away from the object. The program will then turn one motor off momentarily, turning the tundra explorer. The tundra explorer will then turn both motors on so that it moves forward in a new direction.

This program is preloaded in the app under Program 24. Test it out and write down how the robot behaves for each program segment below.



DEMO PROGRAM:

Program 24

OPENING SEGMENT:

SEGMENT 0-25:

SEGMENT >26:

PROGRAMMING NOTES





Kosmos Quality and Safety

More than one hundred years of expertise in publishing science experiment kits stand behind every product that bears the Kosmos name. Kosmos experiment kits are designed by an experienced team of specialists and tested with the utmost care during development and production. With regard to product safety, these experiment kits follow European and US safety standards, as well as our own refined proprietary safety guidelines. By working closely with our manufacturing partners and safety testing labs, we are able to control all stages of production. While the majority of our products are made in Germany, all of our products, regardless of origin, follow the same rigid quality standards.

1st Edition 2018 Thames & Kosmos, LLC, Providence, RI, USA
Thames & Kosmos® is a registered trademark of Thames & Kosmos, LLC.

This work, including all its parts, is copyright protected. Any use outside the specific limits of the copyright law without the consent of the publisher is prohibited and punishable by law. This applies specifically to reproductions, translations, microfilming, and storage and processing in electronic systems and networks. We do not guarantee that all material in this work is free from copyright or other protection.

Technical product development: Genius Toy Taiwan Co., Ltd., Taichung, Taiwan, R.O.C.
Text and Editing: Ted McGuire, Camille Duhamel
Layout: Ashley Greenleaf
Additional Graphics and Packaging: Dan Freitas

Manual design concept: Atelier Bea Klenk, Berlin
Manual illustrations: Genius Toy Taiwan Co., Ltd., Taichung, Taiwan, R.O.C., and Thames & Kosmos

Manual photos:
© istockphoto.com: microolga, p. 4 bottom left; all animal photos, p. 6
© fotolia.com: nataliafrei, p. 4 bottom right; Maxisport, p. 4 top center
© shutterstock.com: Slavoljub Pantelic, p. 4 top right
Courtesy of DARPA, p. 4 top left
All other photos: Genius Toy Taiwan Co., Ltd., Taichung, Taiwan, R.O.C., and Thames & Kosmos

The publisher has made every effort to locate the holders of image rights for all of the photos used. If in any individual cases any holders of image rights have not been acknowledged, they are asked to provide evidence to the publisher of their image rights so that they may be paid an image fee in line with the industry standard.

Android, Google Play and the Google Play logo are trademarks of Google Inc. Apple and the Apple Logo are trademarks of Apple Inc., registered in the US and other countries. App Store is a service mark of Apple Inc., registered in the US and other countries.

Distributed in North America by Thames & Kosmos, LLC. Providence, RI 02903
Phone: 800-587-2872; Web: www.thamesandkosmos.com

Distributed in United Kingdom by Thames & Kosmos UK, LP. Cranbrook, Kent TN17 3HE
Phone: 01580 713000; Web: www.thamesandkosmos.co.uk

We reserve the right to make technical changes.

Printed in Taiwan / Imprimé en Taiwan



620382-03-310718