EXPERIMENT MANUAL

Mega Cyborg Hand



THAMES & KOSMOS

Franckh-Kosmos Verlags-GmbH & Co. KG, Pfizerstr. 5-7, 70184 Stuttgart, Germany | +49 (0) 711 2191-0 | www.kosmos.de
Thames & Kosmos, 89 Ship St., Providence, RI, 02903, USA | 1-800-587-2872 | www.thamesandkosmos.com

KIT CONTENTS

What's inside your experiment kit:

Good to know!

If you are missing any parts, please contact Thames & Kosmos customer service.

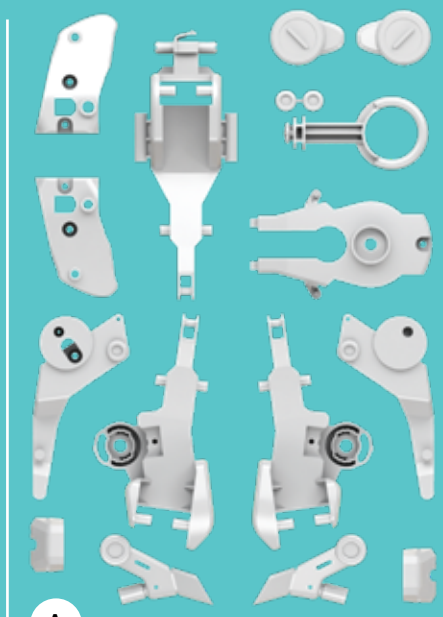
A

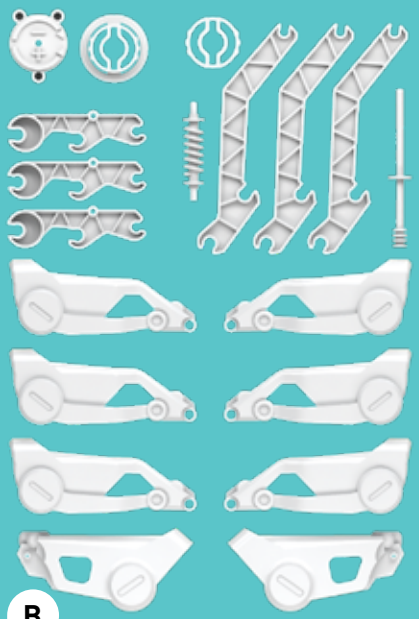
B


C

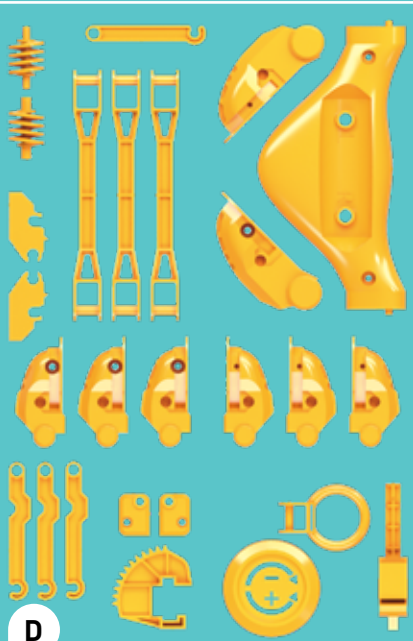
D

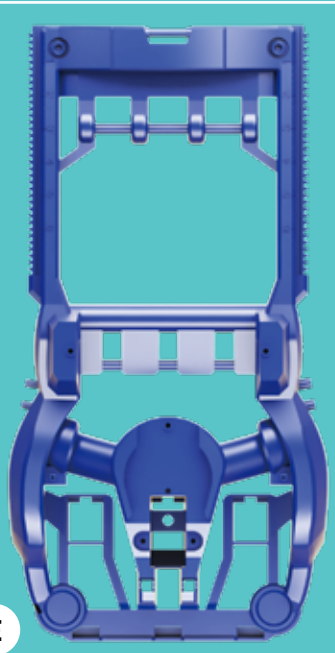
E

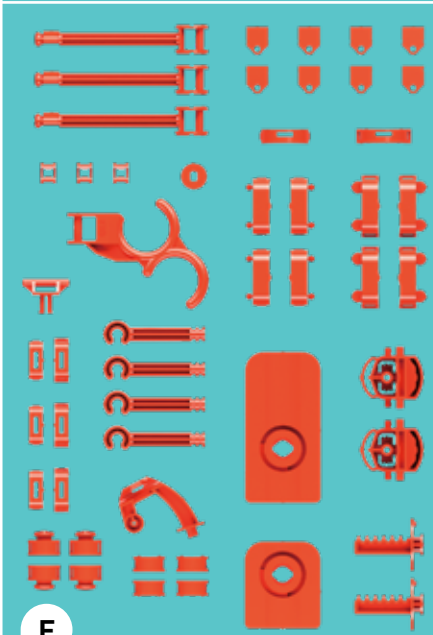
F

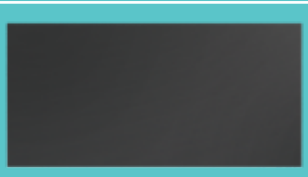
P7

P1



P2



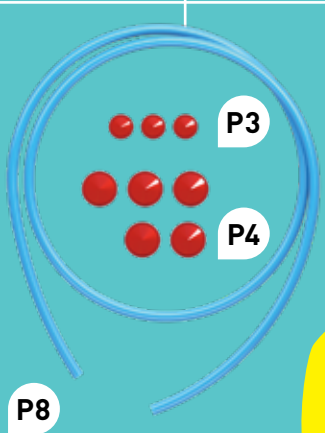
P3

P4

P8

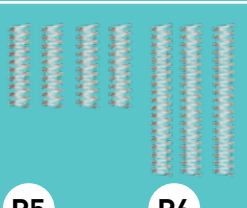
P5

P6

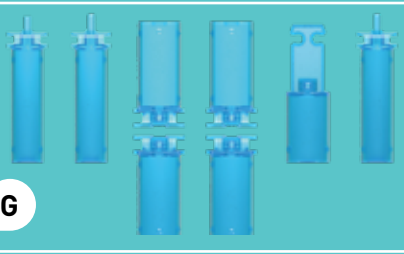
G


P9

Wow!

That's a lot of parts!

TABLE OF CONTENTS

Kit Contents ..... Inside front cover
Table of Contents 1
Important Information 2
The Mega Cyborg Hand Comic: Part 1 4

ASSEMBLING THE MEGA CYBORG HAND
Assembling the palm rest, hand frame, and fingers 9
Assembling the hydraulic systems 17
Experiment 1: The power of air and water ... 20
Experiment 2: Hydraulic transmission 21
Check It Out: Hydraulics 24
Assembling the thumb 25
Assembling the cyborg hand 28
Right- and left-handed configurations 32

The Mega Cyborg Hand Comic: Part 2 36

USING THE MEGA CYBORG HAND
Basic usage instructions 39
Settings 40
Experiment 3: Picking up small objects 44
Experiment 4: Grabbing large objects 45
Check It Out: Exoskeletons 46
Troubleshooting 48
Check It Out: Cyborgs 50
Experiment 5: Mysterious air pressure 52

TIPS

YOU WILL FIND ADDITIONAL INFO IN THE CHECK IT OUT SECTIONS ON PAGES 24, 46, AND 50



Checklist:

✓	No.	Description	Quantity	Item No.
○	P1	Wide-headed screw	3	723606A
○	P2	Screws	20	723606B
○	P3	Caps, small	3	723604A
○	P4	Caps, large	5	723604B
○	P5	Short spring	4	723605A
○	P6	Long spring	3	723605B
○	P7	Foam pads	19	723603A
○	P8	Tubing	1	723603B
○	P9	Lubricant packet	1	723607
○	A	Frame A with parts A1 – A16	1	723601
○	B	Frame B with parts B1 – B11	1	723597
○	C	Frame C with parts C1 – C14	1	723598
○	D	Frame D with parts D1 – D18	1	723599
○	E	Main hand frame part	1	723600
○	F	Frame F with parts F1 – F20	1	723596
○	G	Frame G with parts G1 – G3	1	723602

YOU WILL ALSO NEED:
Scissors or diagonal cutters, nail file, Phillips-head screwdriver (PH1 size recommended), ruler, felt-tip marker, plastic cup or mug filled with tap water

Yay!
Let's begin!

620501-02-220420

WARNING!

Not suitable for children under 3 years. Choking hazard — small parts may be swallowed or inhaled. Strangulation hazard — long tubes may become wrapped around the neck.

Only for use by children aged 7 years and older. Instructions for parents or other supervising adults are included and have to be observed.

Keep the packaging and instructions as they contain important information.

The right tool

Using the right tool can make assembling your models easier and it can also make your models work better in the end. It is best to cut the plastic parts out of their frames with a small diagonal cutter (such as those used for electronics work) or model pliers. Using these tools, the parts can be precisely cut so that no burrs remain on the parts and there is no need to file them down.
If you don't have these pliers at home, you can use scissors and a nail file. Normal scissors do not cut as precisely as a diagonal cutter, so you may have to file some of the rough edges down with the nail file.



Build and experiment

Exoskeletons and hydraulics are exciting scientific topics that are easy to understand, especially with the help of a mega cyborg hand! You can build one with the parts in this kit. You need patience to build it and set it up. To stay focused, it is advisable not to build the model all in one sitting, but rather to take breaks in between building sessions. Try to follow the instructions carefully and, if in doubt, ask an adult for help.

IMPORTANT INFORMATION

This experiment kit is only intended for children over 7 years of age.

Dear Parents!

Children want to explore, understand, and create new things.
They want to try things and do it by themselves. They want to gain knowledge!
They can do all of this with Thames & Kosmos experiment kits.
With every single experiment, they grow smarter and more knowledgeable.

Before building and experimenting, read the instructions together with your child and discuss the safety instructions.

Support your child with advice and a helping hand, especially during tricky assembly steps or experiments.

To prevent damage to the work surface on which your child is building and experimenting, provide them with a mat or other surface protection. When experimenting with water, it is a good idea to have some paper towels ready to wipe up spills.

When cutting the plastic parts out of the frames with the diagonal cutter or scissors, special care must be taken, not just because of the sharp edges on the tools, but also because the plastic parts can yield sharp edges or burrs. These can be removed with the help of the diagonal cutter or a nail file. Supervise your child when they are using the sharp tools until you trust that they can handle the tools independently.

We hope you and your child have a lot of fun building and playing with the mega cyborg hand.

TIPS

IMPORTANT:

REMOVE THE PARTS FROM THE FRAMES ONLY WHEN THEY ARE NEEDED. REMOVE EXCESS MATERIAL BEFORE ASSEMBLY WITH THE HELP OF A DIAGONAL CUTTER OR A NAIL FILE.

Make sure that all burrs are removed from the plastic parts before assembly so that your mega cyborg hand functions properly.

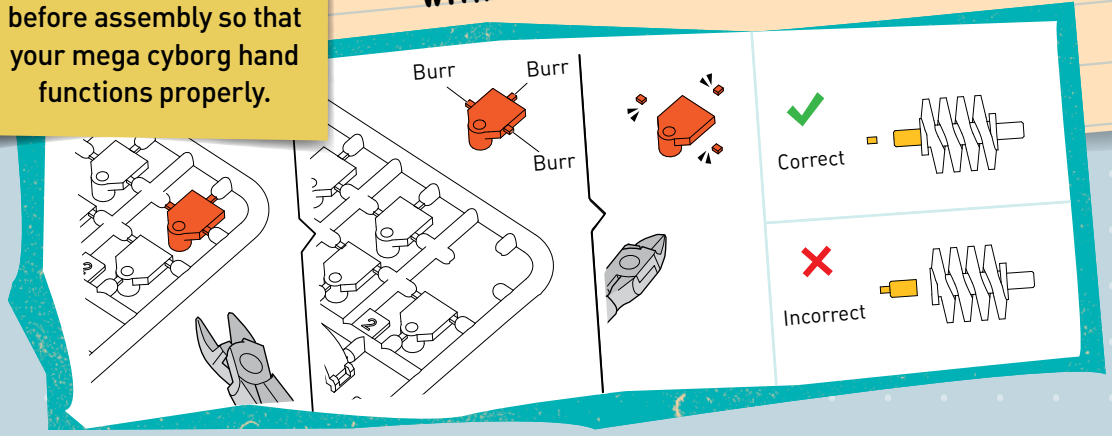

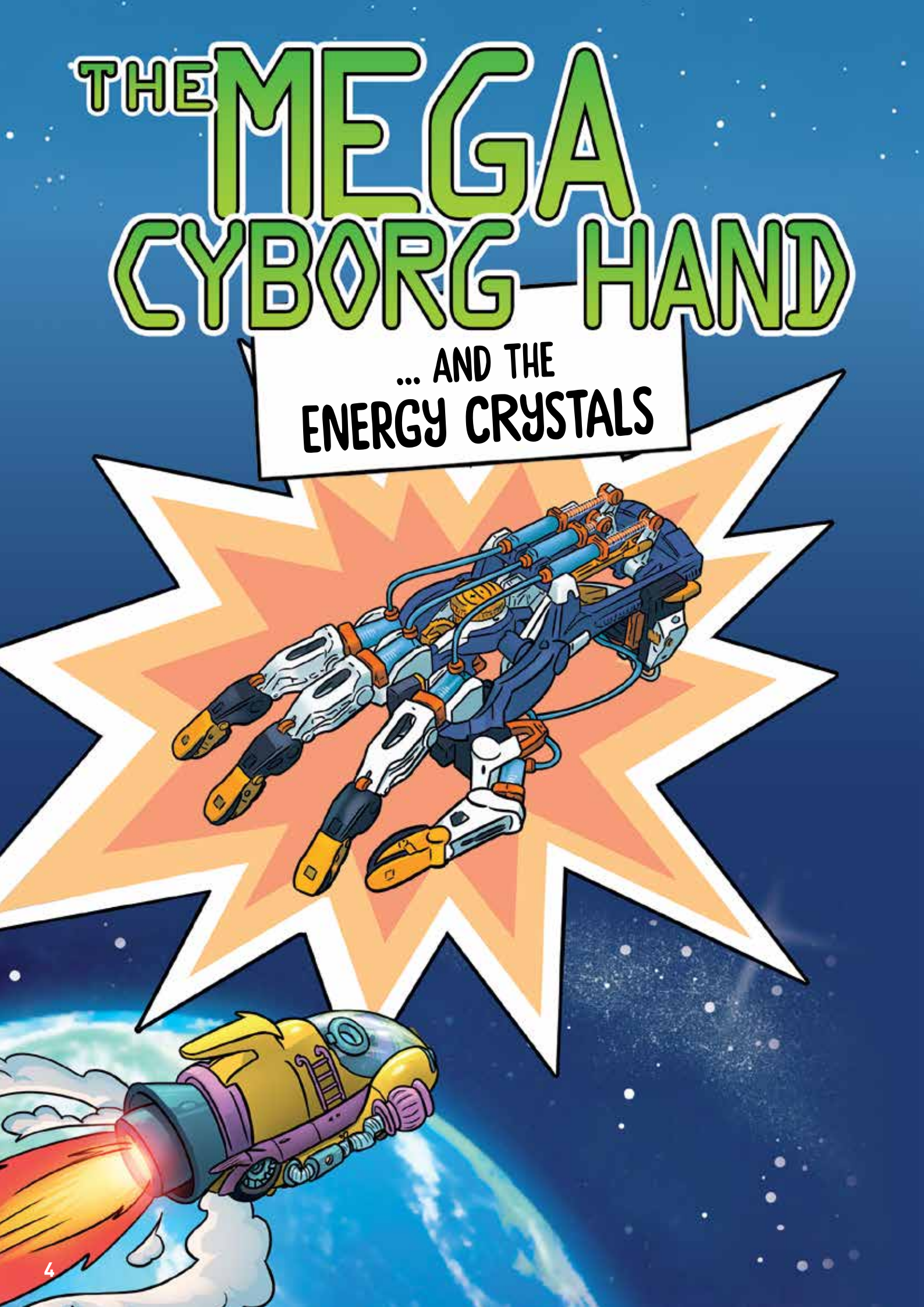
THE MEGA CYBORG HAND
... AND THE ENERGY CRYSTALS


TOM & IZZY
IT'S QUIET IN THE JUNKYARD.
EVERYONE HAS GONE TO SLEEP ...
... EXCEPT TOM AND IZZY.
HERE, WHERE OTHER PEOPLE JUST SEE JUNK,
OUR HEROES SEE ENDLESS POSSIBILITIES.
THE THRUST MUST BE INCREASED BY A FACTOR OF 10.
I FOUND SOMETHING!
IT'S THE PIECE WE NEEDED!
WE NEED MORE THRUST ...
... TO OVERCOME GRAVITY.
HMM ... THAT COULD WORK.
... AS LONG AS IT ISN'T BROKEN.
DON'T WORRY! THIS SMALL LEAK WILL BE EASY TO PLUG.
ALRIGHT, LET'S GET TO WORK!


IZZY CAN REPAIR ANYTHING. SHE IS A GENIUS WHEN IT COMES TO MECHANICS.
TOM, ON THE OTHER HAND, IS A SCIENTIST THROUGH AND THROUGH ...
... HE'S ALWAYS GAME TO TRY OUT AN EXPERIMENT!
TOGETHER, THEY CAN BUILD ANYTHING!
I THINK IT'S READY!
YES! WE DID IT!
NOTHING CAN STOP US NOW!
WHERE SHOULD WE FLY NEXT?
WHEREVER WE WANT!
WE CAN GO ANYWHERE!



Continued on page 36



Assembling THE MEGA CYBORG HAND

Let the *building* begin!

Are you ready to build? Let's begin the construction of your mega cyborg hand. You will start with the palm rest, the hand frame, and the fingers. Always wait to separate a plastic part from its frame until it is called for in the assembly instructions. This way, you can make sure that you don't lose any parts.

ASSEMBLING THE PALM REST

1

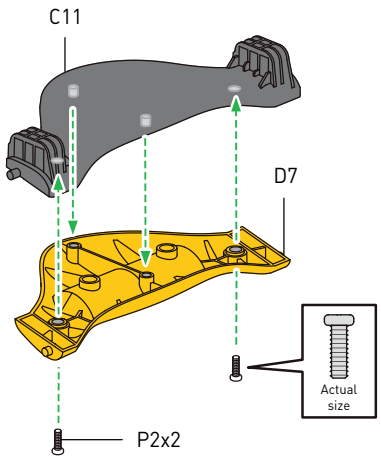

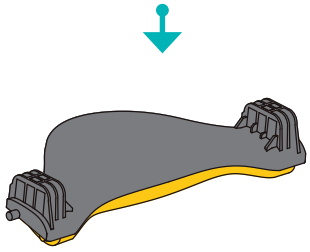

2

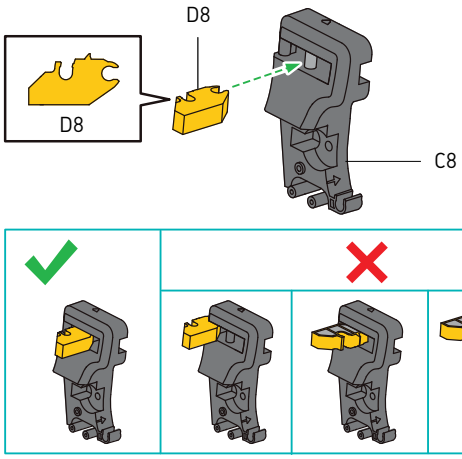

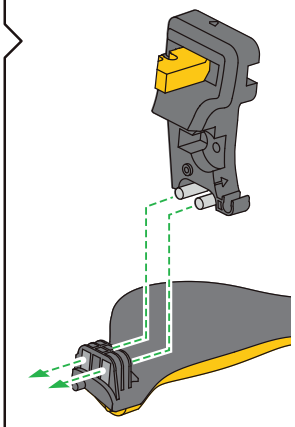

3

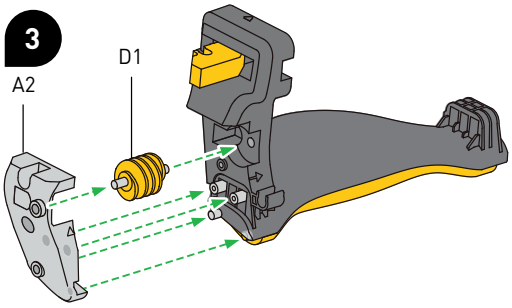

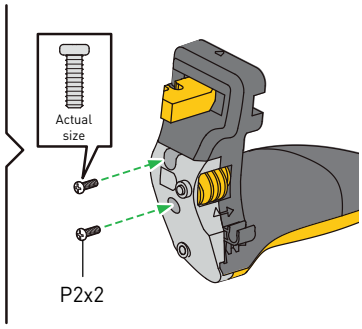

4

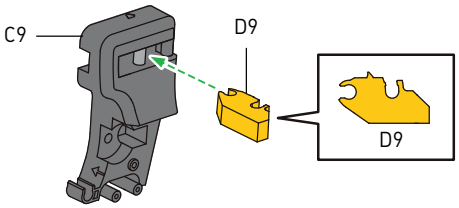

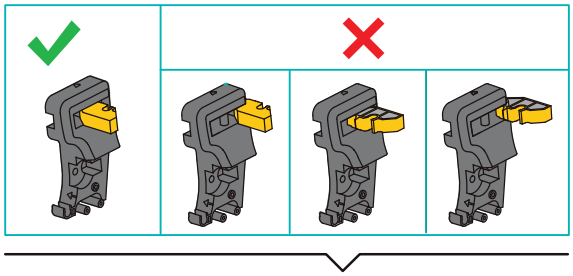

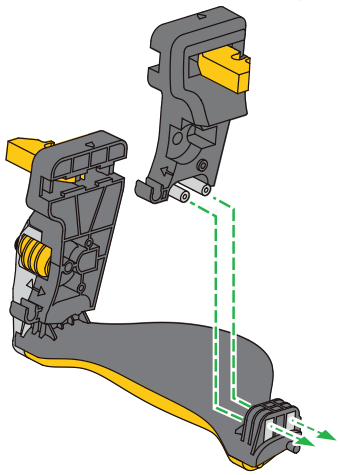

5

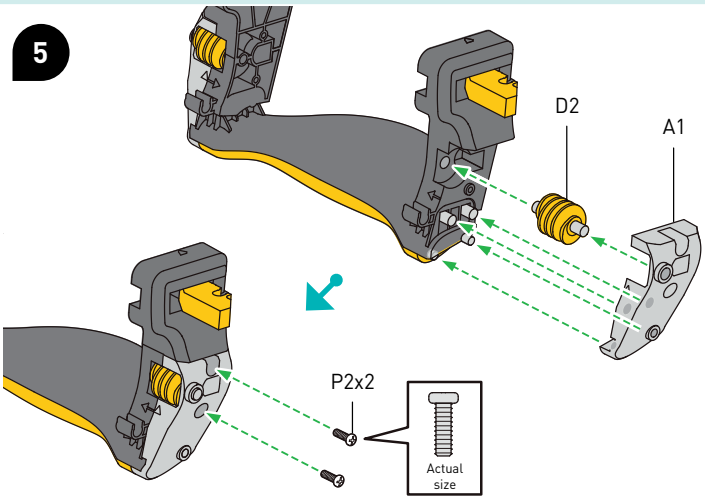

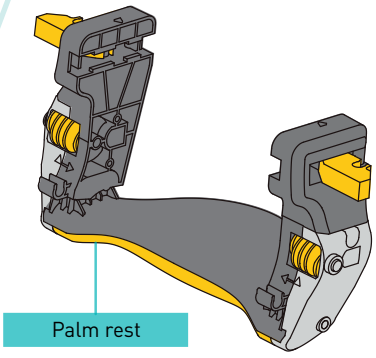

Front view

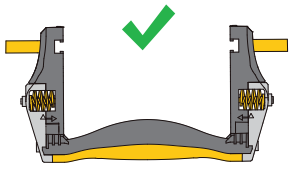

Do not squeeze.
The assembly could break.

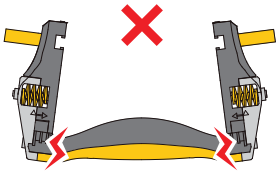

ASSEMBLING THE HAND FRAME

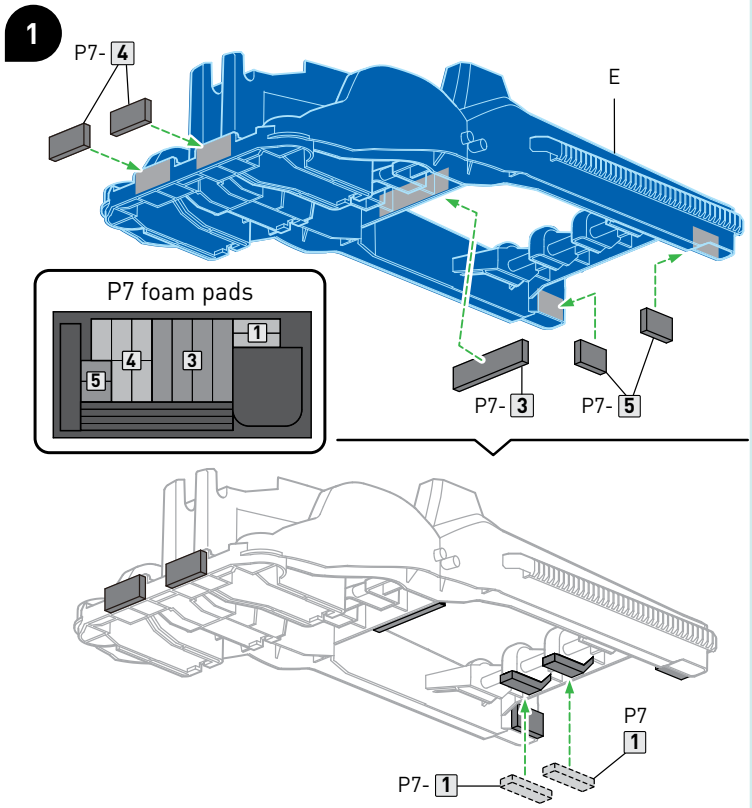

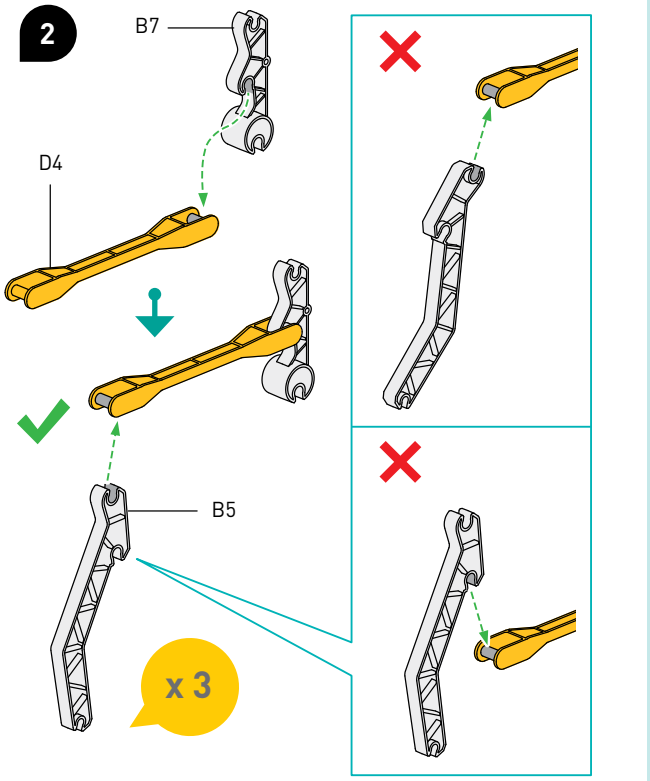

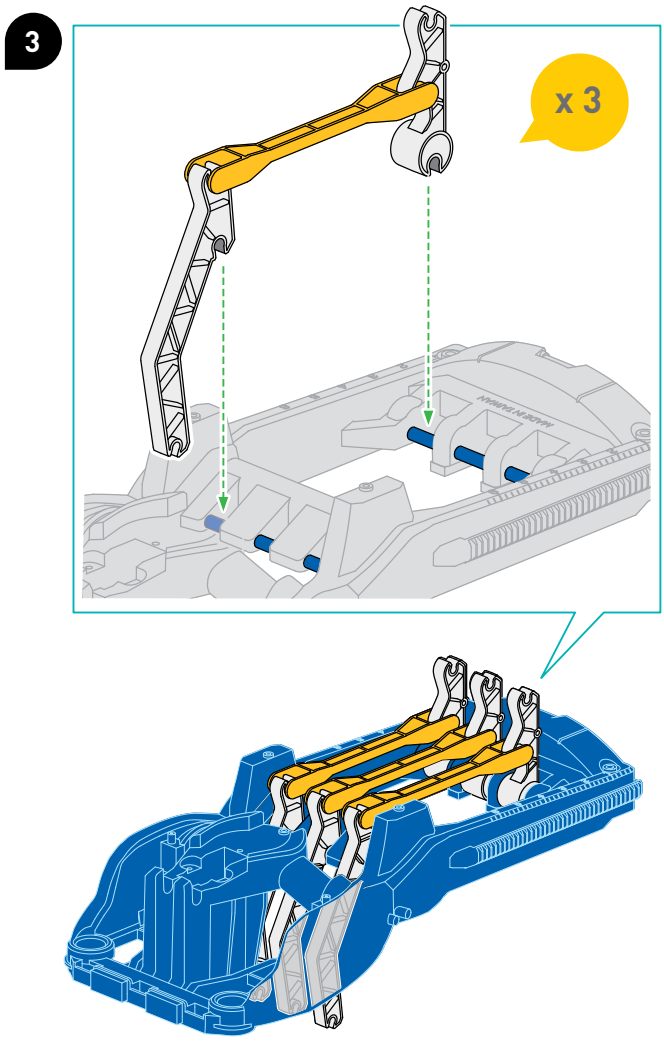

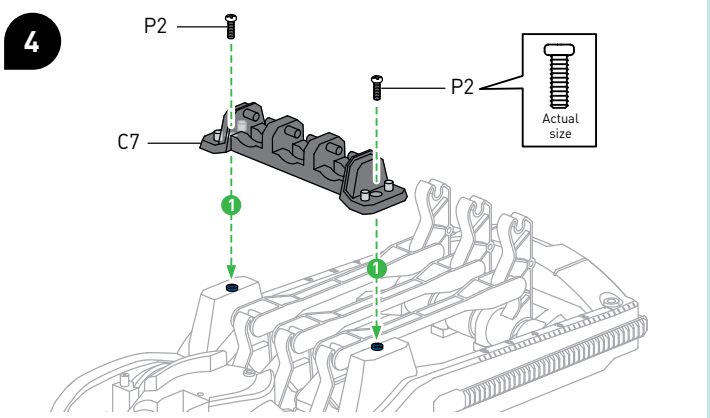

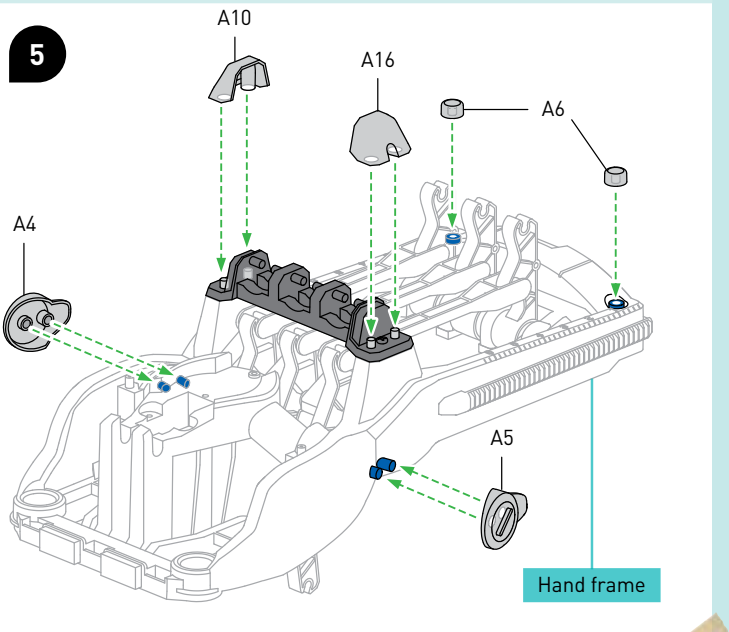

ASSEMBLING THE FINGERS

1

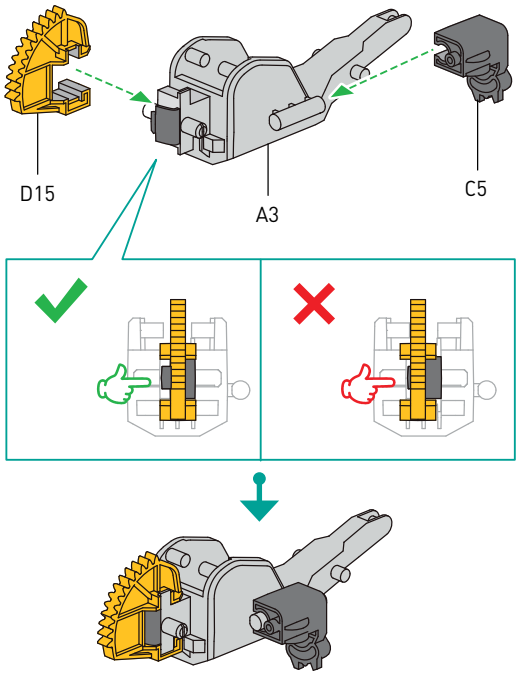

2

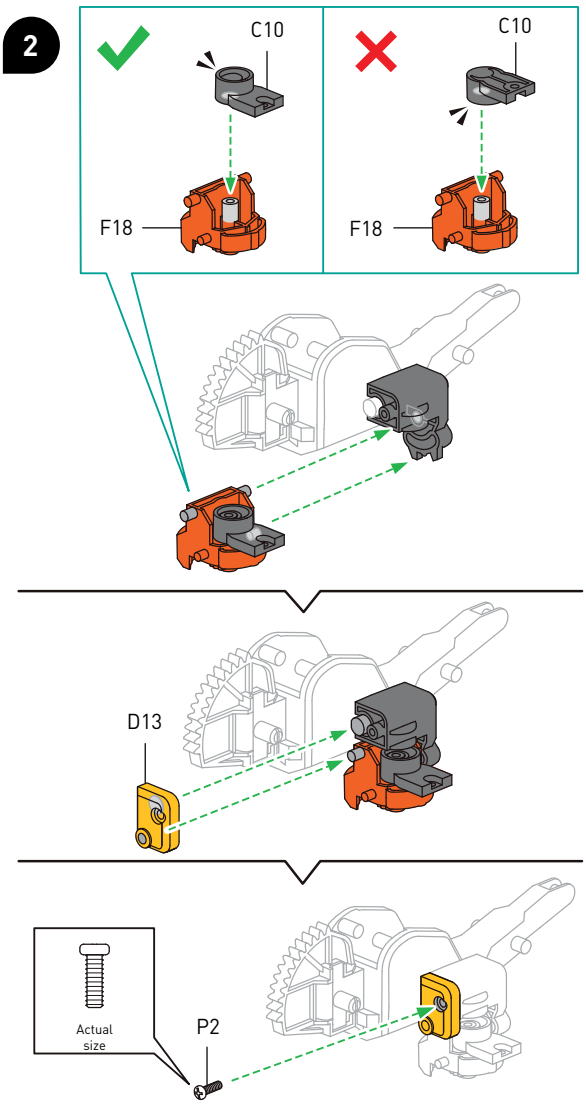

3

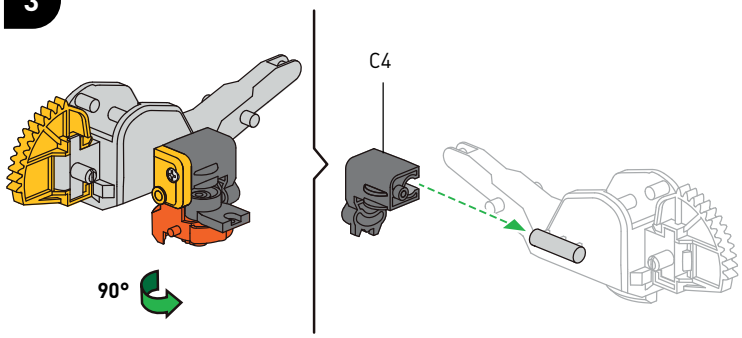

4

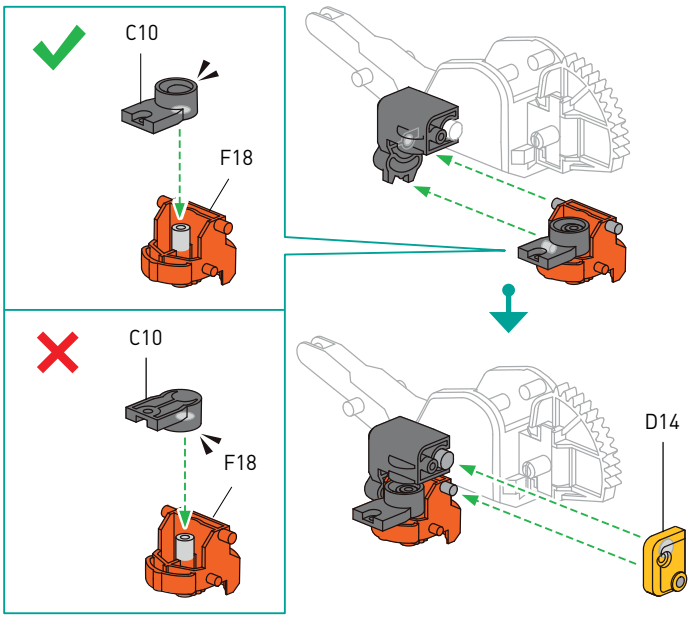

5

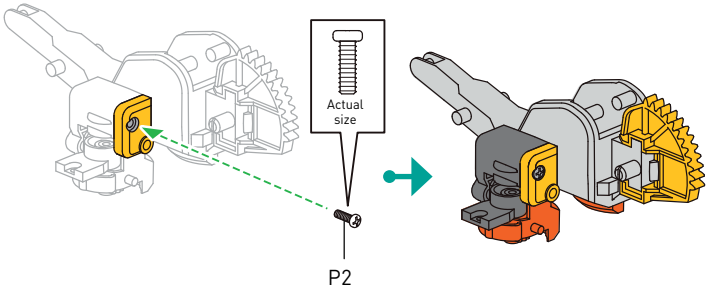

6

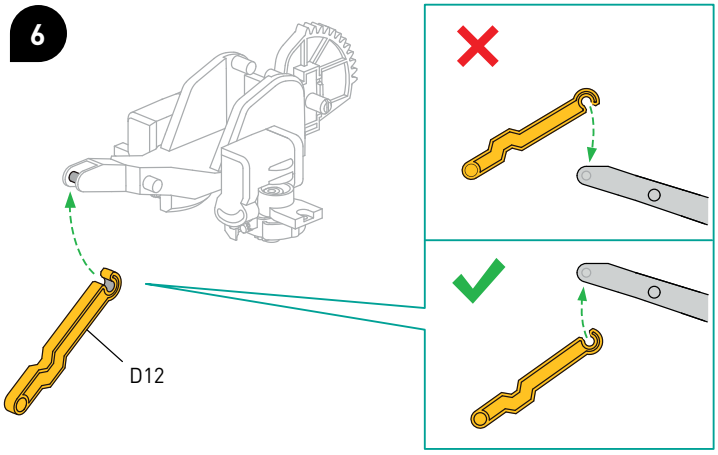

7

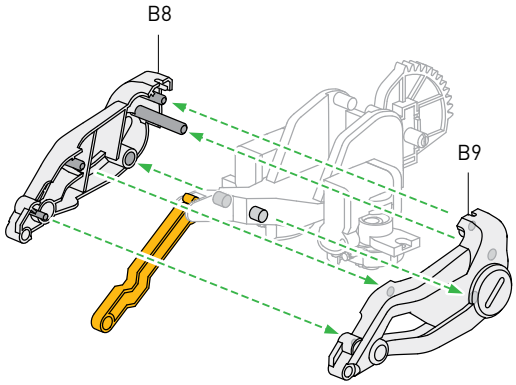
B8
B9

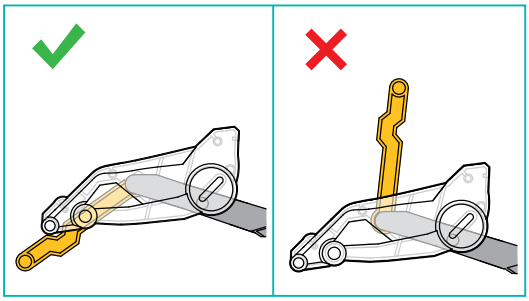

8

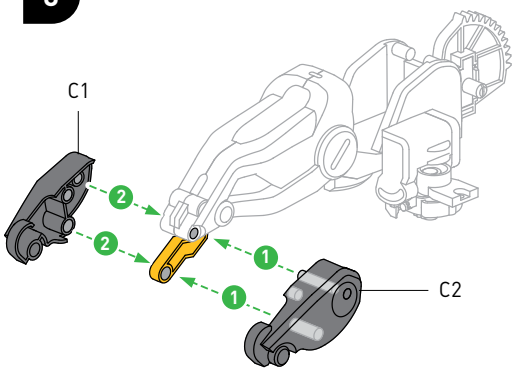
C1
C2

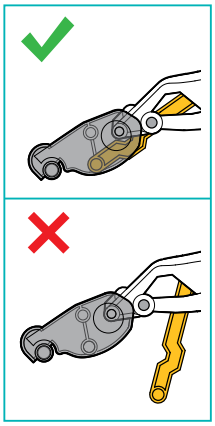

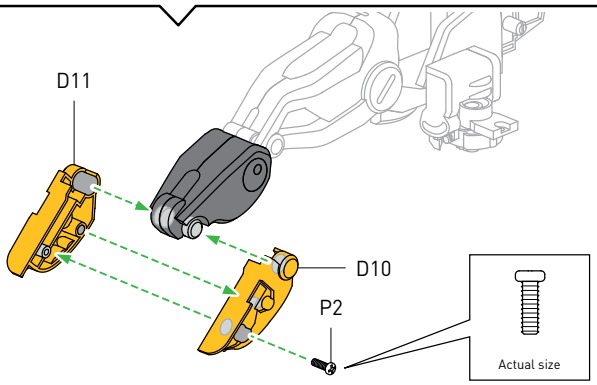
D11
D10
P2
Actual size

9

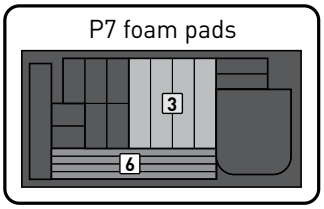
P7 foam pads
3
6

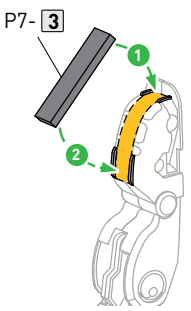
P7- 3

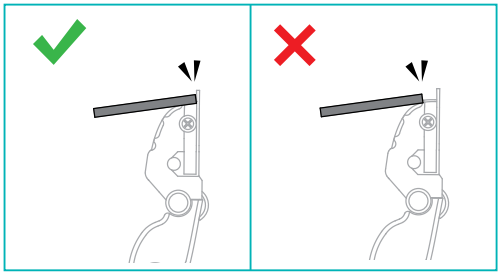

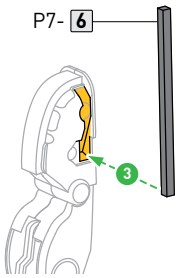
P7- 6

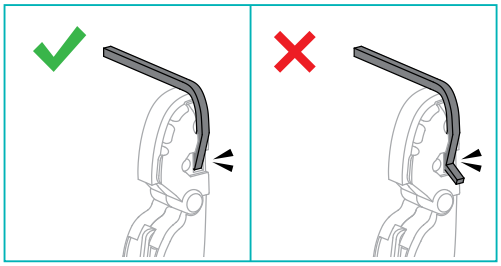

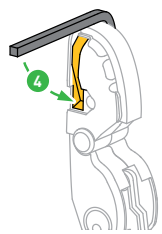

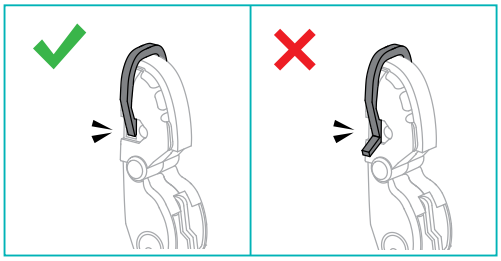

10

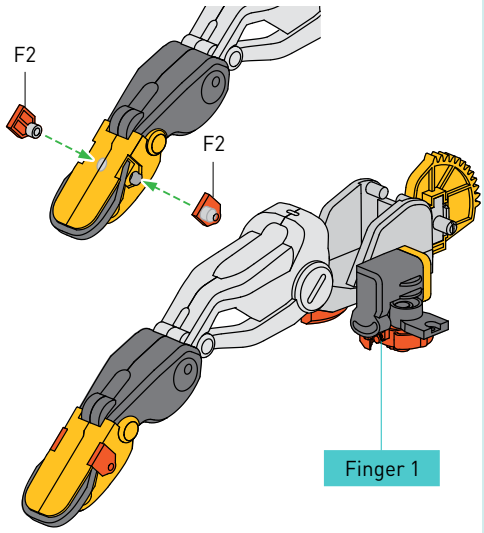
F2
F2
Finger 1

11

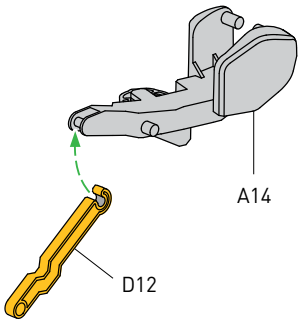
A14
D12

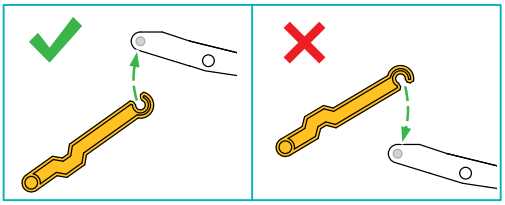

12

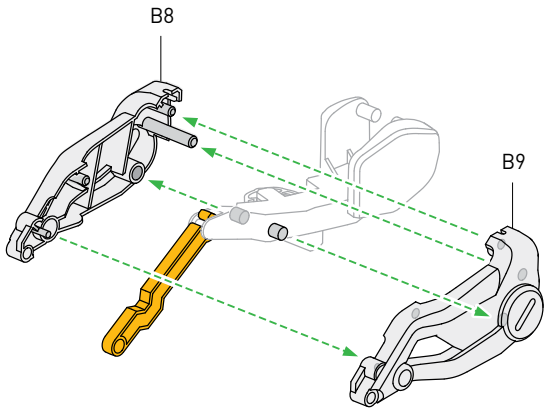
B8
B9

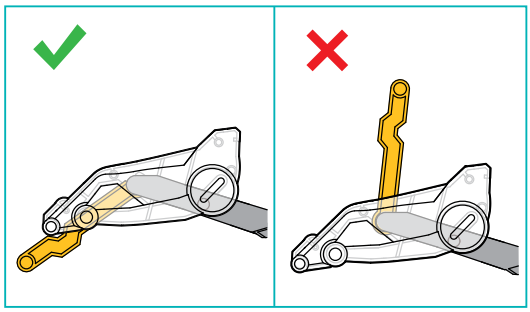

13

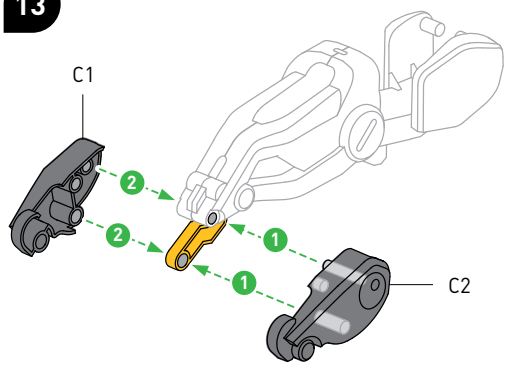
C1
C2

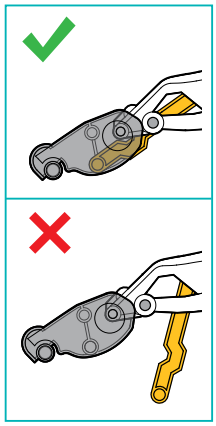

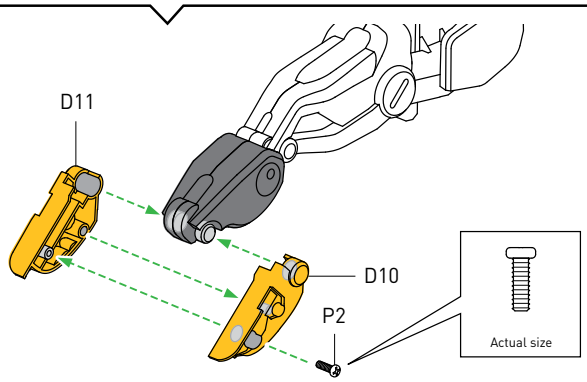
D11
D10
P2
Actual size

14

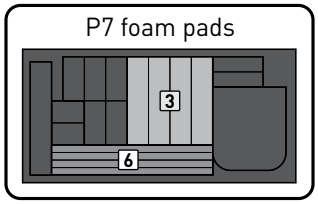
P7 foam pads
3
6

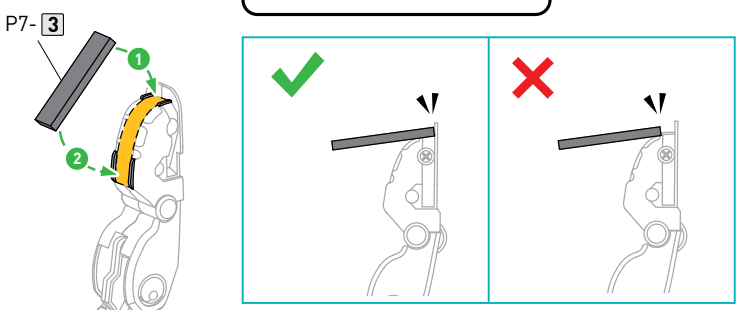
P7- 3

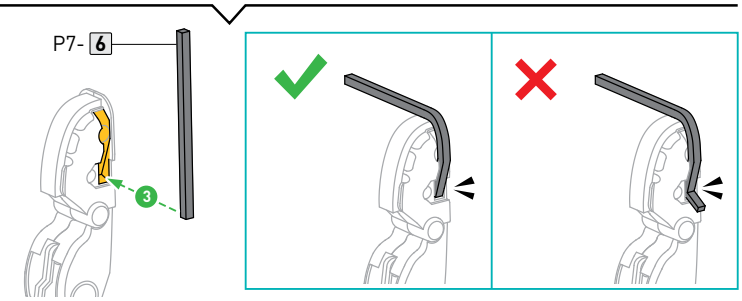
P7- 6

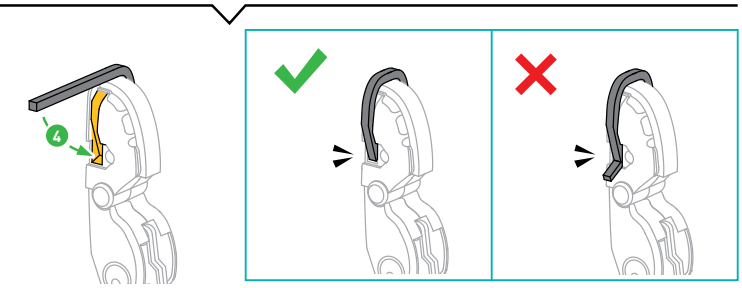

15

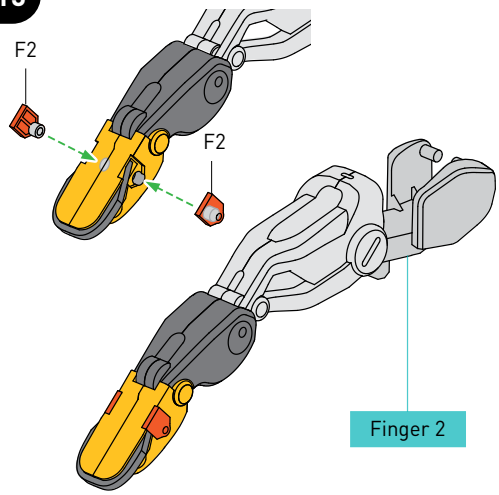
F2
F2
Finger 2

16

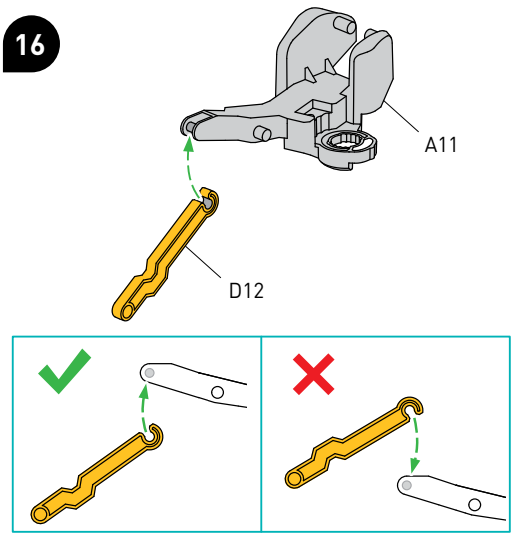
A11
D12

17

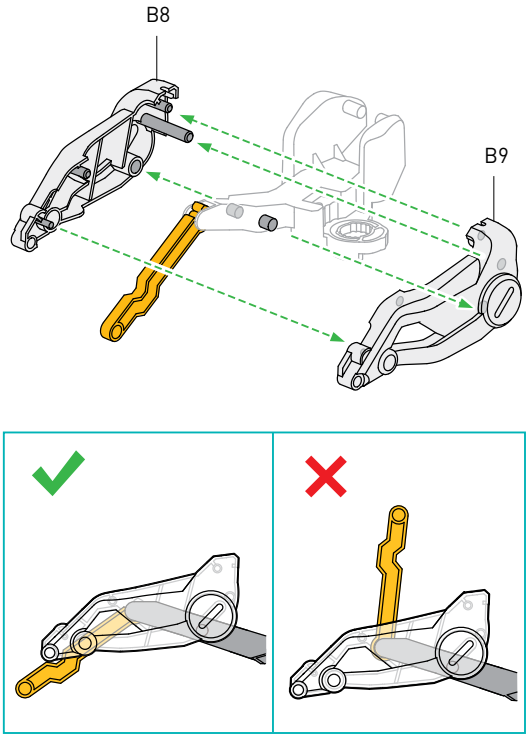
B8
B9

18

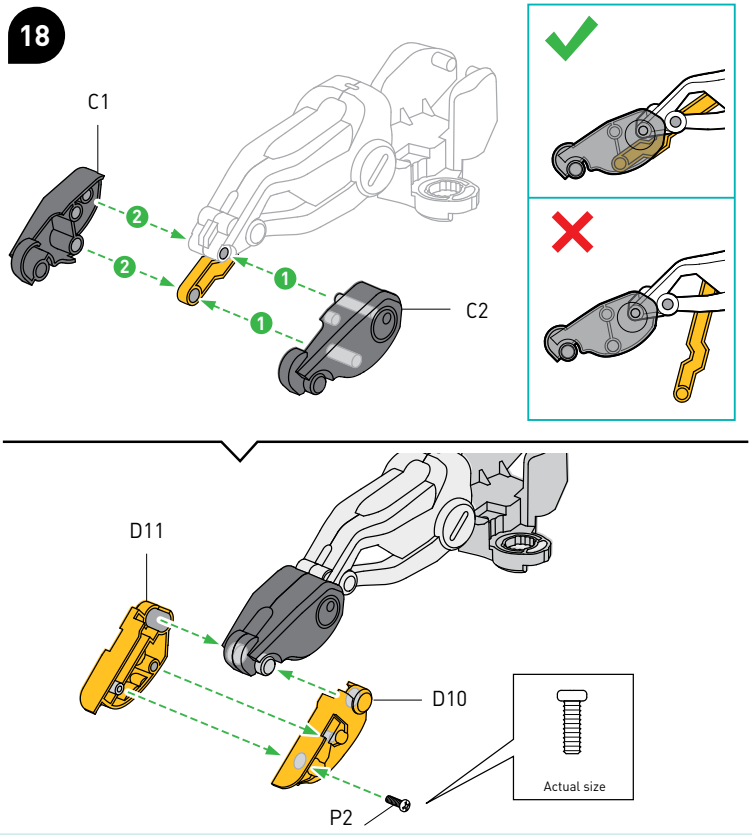
C1
C2
D11
D10
P2
Actual size

19

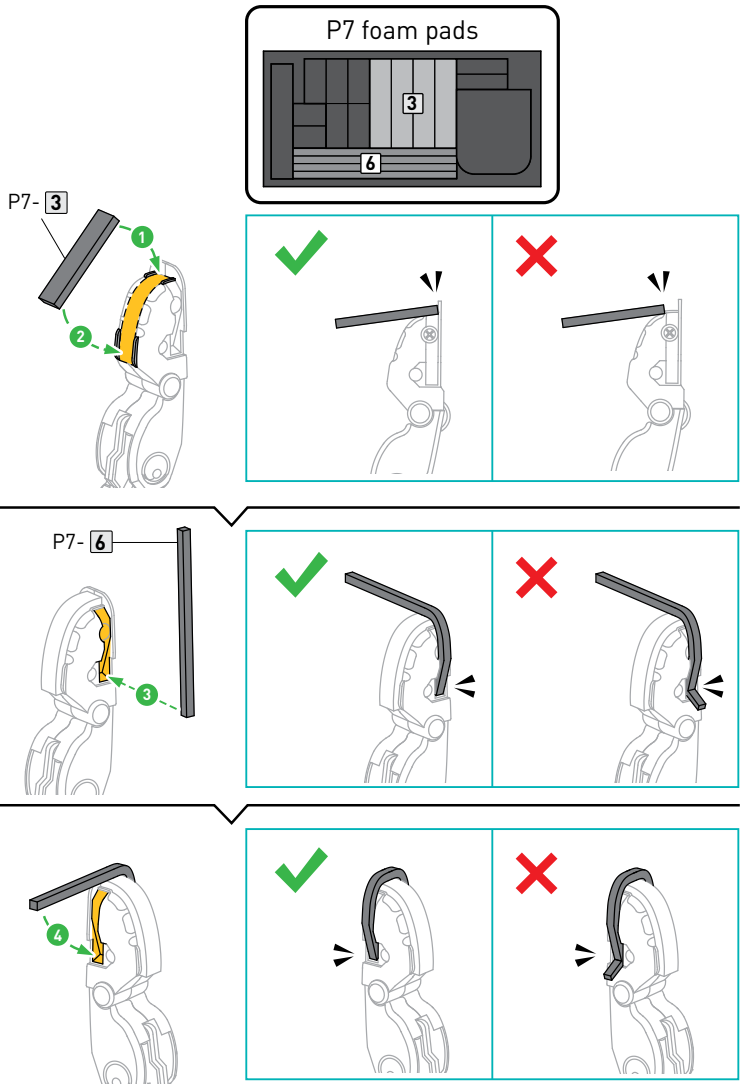
P7 foam pads
3
6
P7- 3
P7- 6
4

20

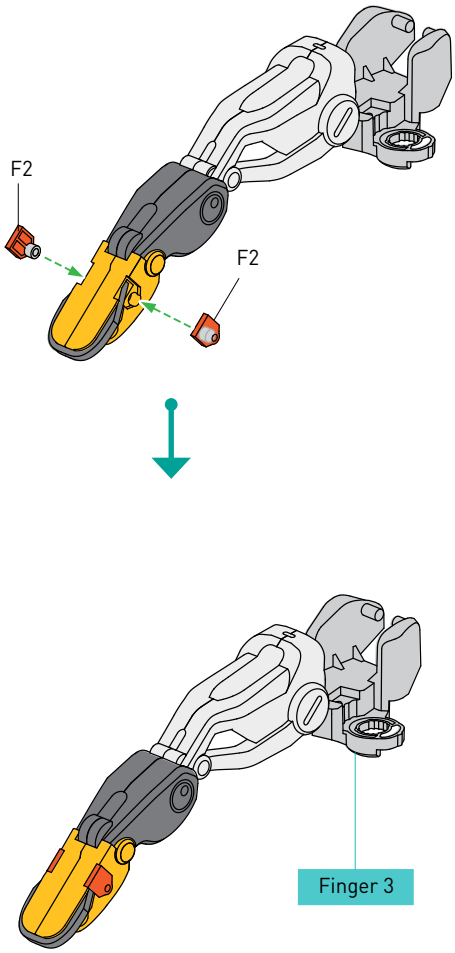
F2
F2
Finger 3

21

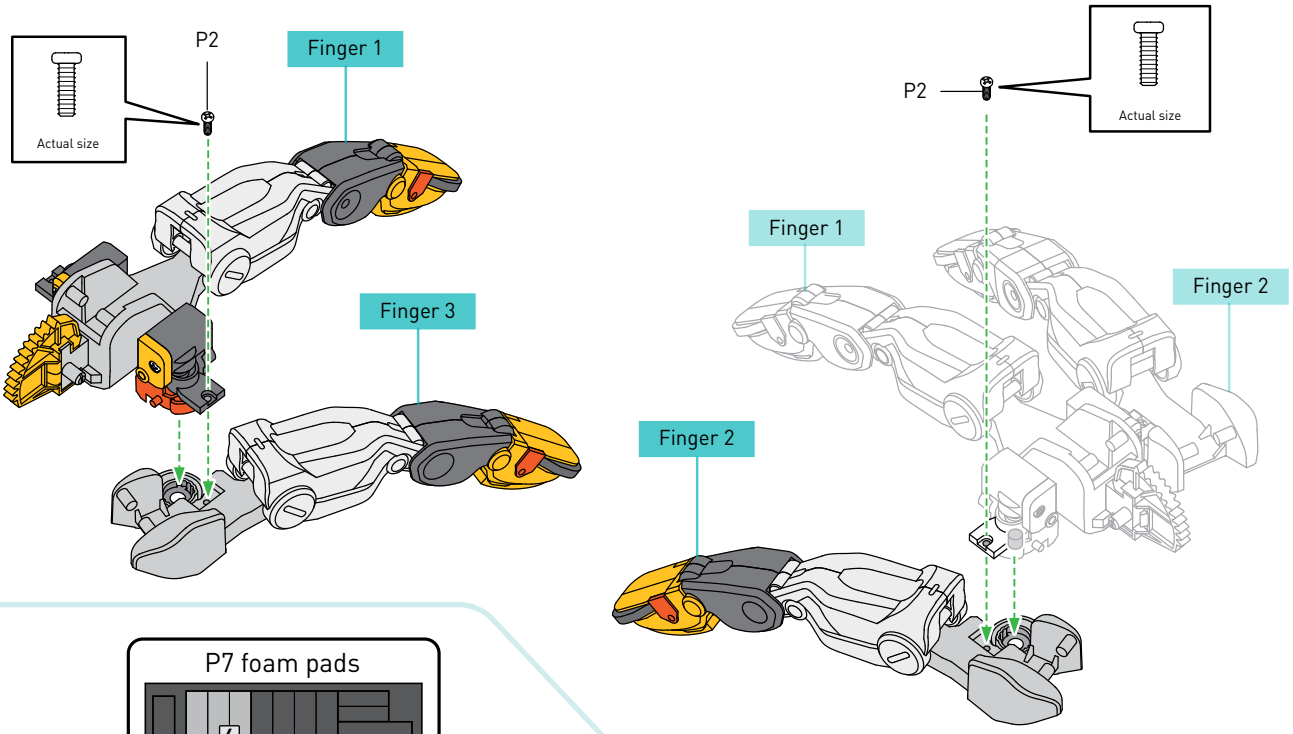
P2
Actual size
Finger 1
Finger 3
P2
Actual size
Finger 1
Finger 2
Finger 2

22

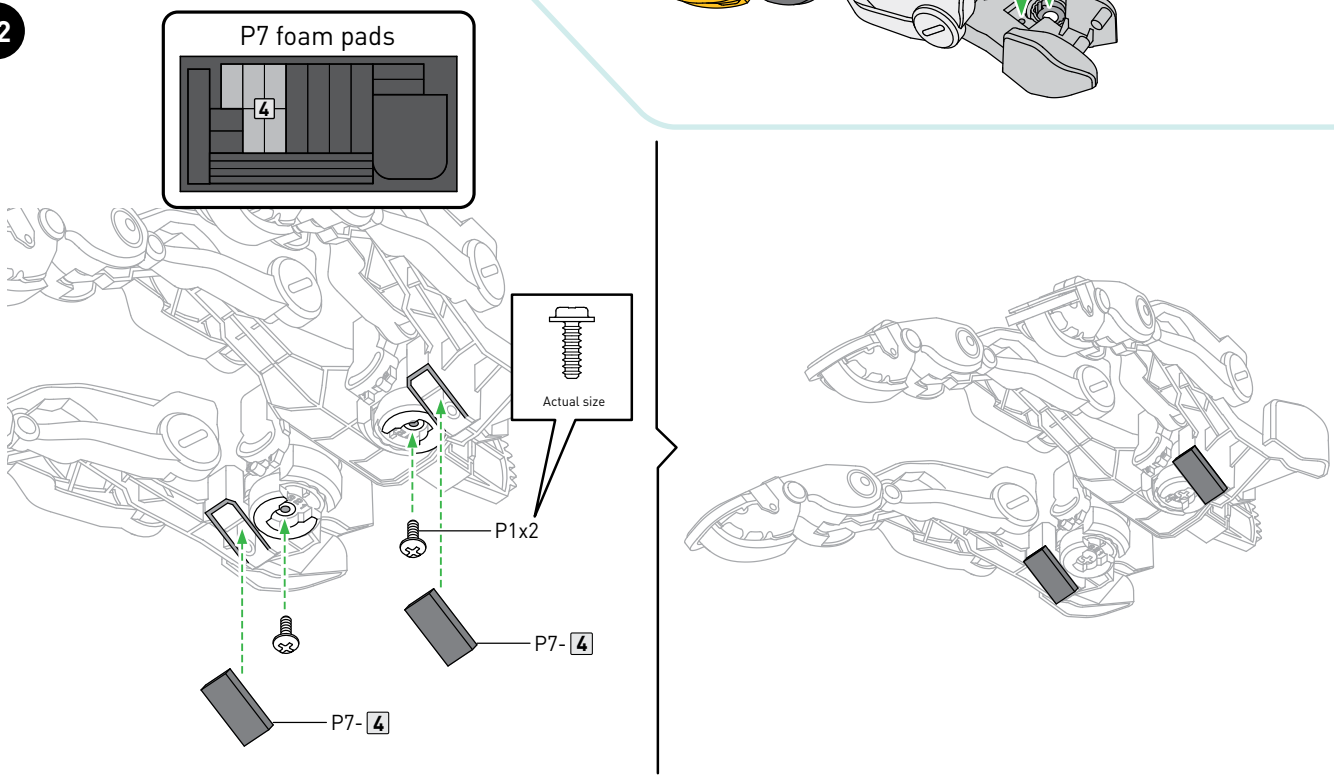
P7 foam pads
4
Actual size
P1x2
P7- 4
P7- 4

23

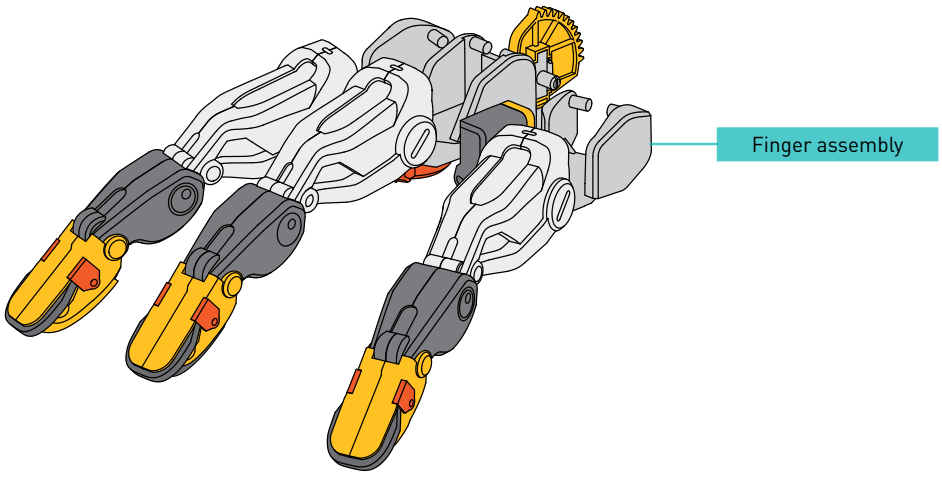
Finger assembly



Assembling THE HYDRAULIC SYSTEMS

The cylinders, pistons, and tubes make up the hydraulic systems, which are some of the most important components of your cyborg hand. Filled with water, they transfer motion from your fingers to the fingers of the cyborg hand. Let's assemble the hydraulic systems now.

ASSEMBLING THE HYDRAULIC SYSTEMS

Hydraulic system A x3

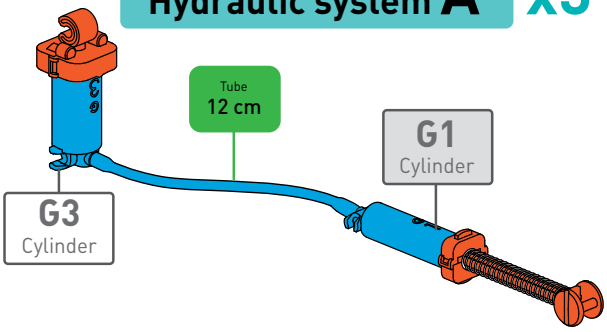

Hydraulic system B x1

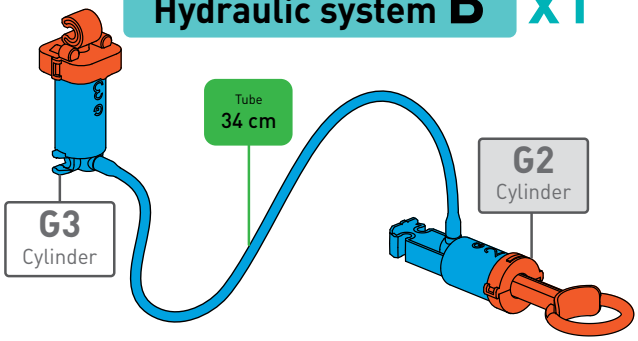

CUT THE TUBING TO LENGTH

Measure and mark before cutting.

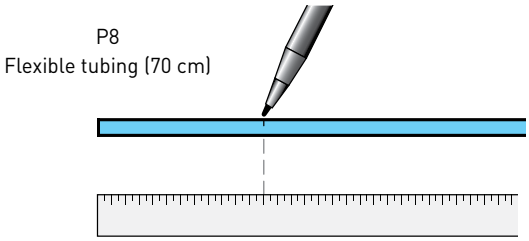

Make straight cuts when cutting.

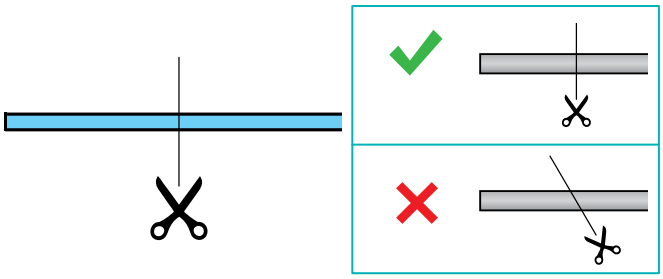

Cut three tubes of this length:

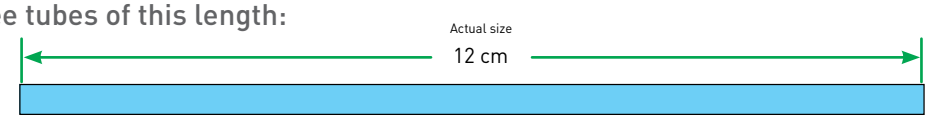

Tube 12 cm x3

The remaining tube will be this long:

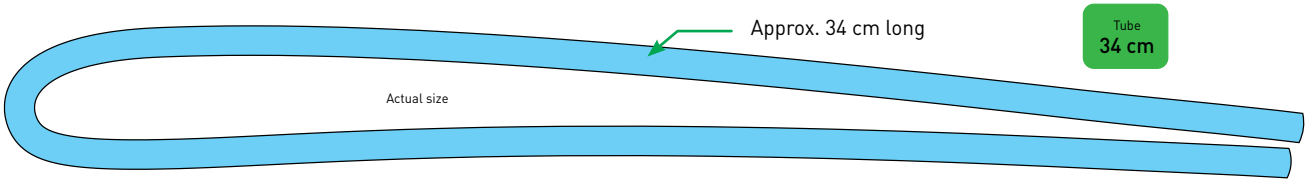

Tube 34 cm

HOW TO OIL THE CYLINDERS

Fill the oil well.

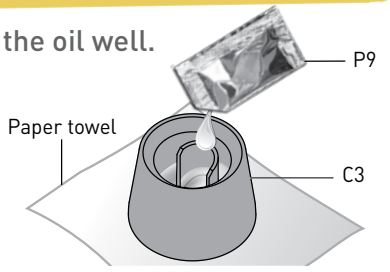

Be careful not to spill oil from the C3 oil well.

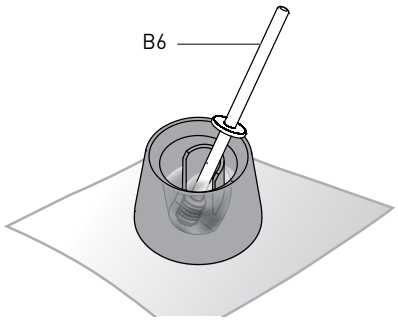

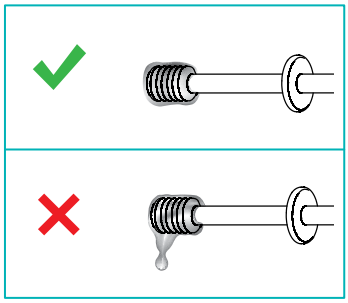

= Oil	When you see this symbol in the instructions, oil the component indicated.

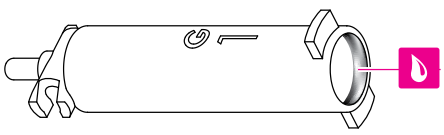

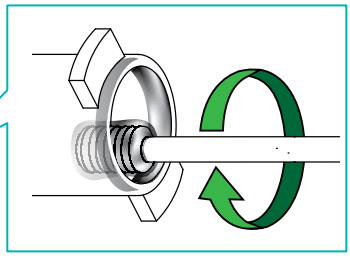

Oil only the area shaded in gray. Work carefully and do not touch the oil with your hands or get it into your eyes. Dispose of leftover oil in the household trash after assembly. Do not pour it down the drain.

ASSEMBLING THE HYDRAULIC SYSTEMS

ASSEMBLE THE G3 CYLINDERS

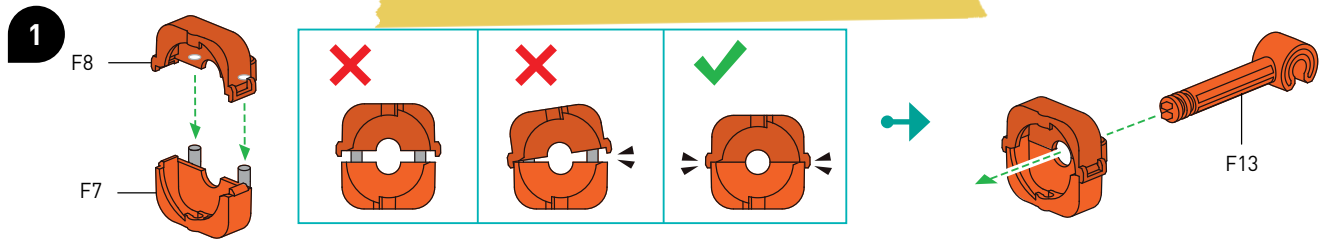

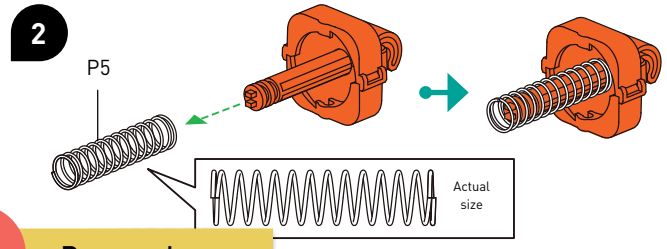

Remove burrs before assembly.

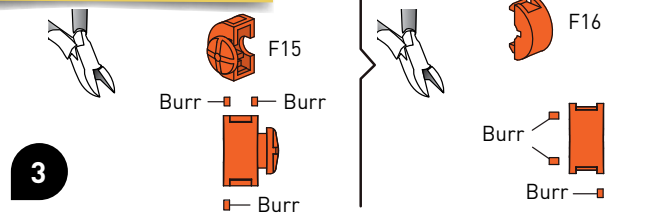

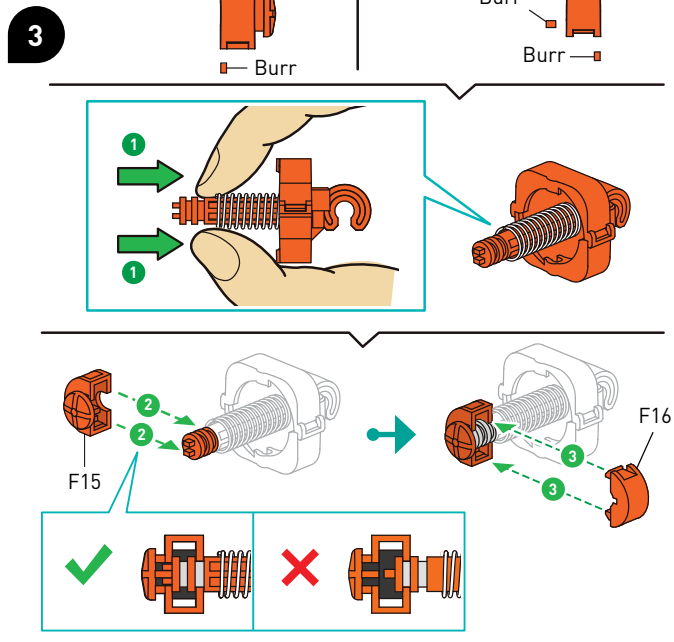

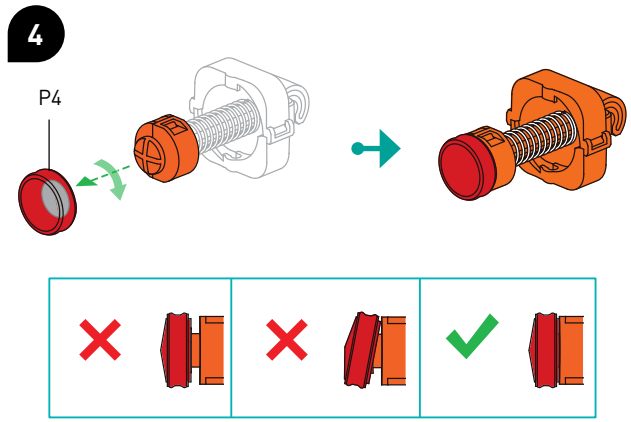

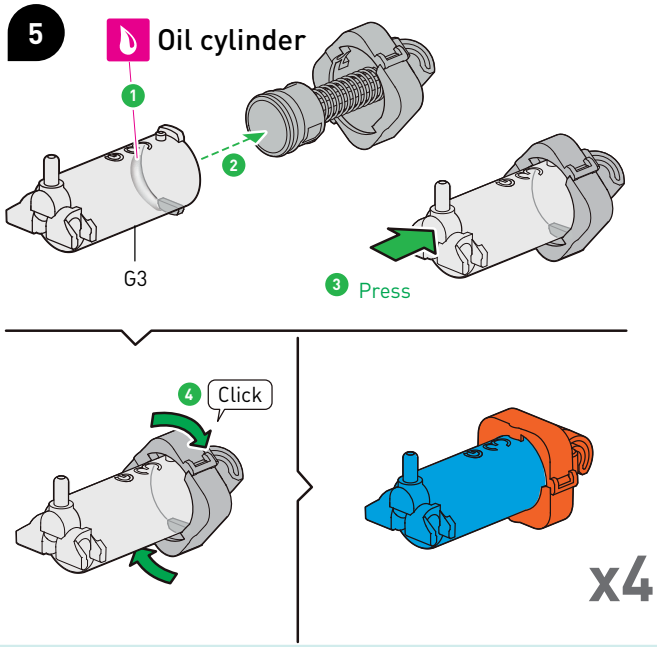

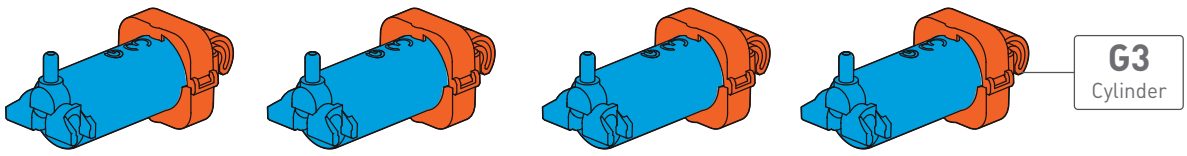

ASSEMBLE THE G2 CYLINDER

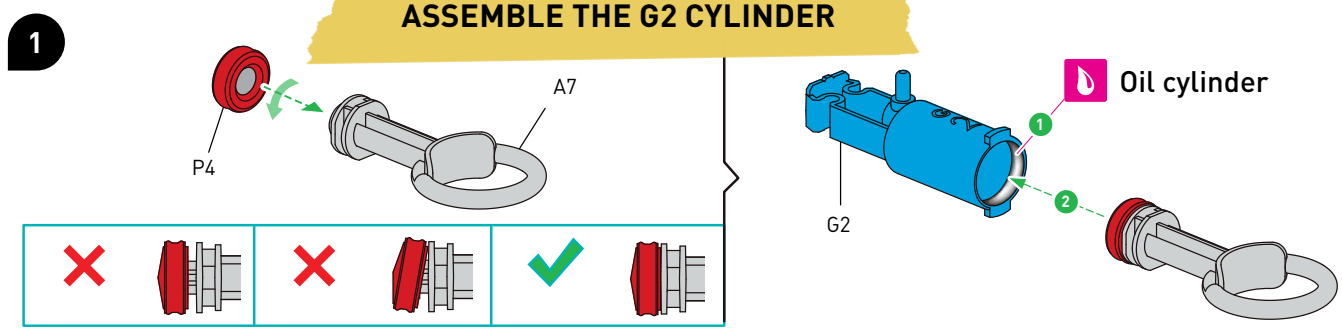

2

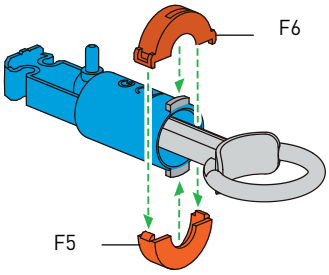

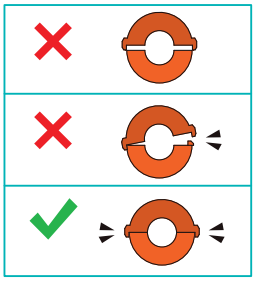

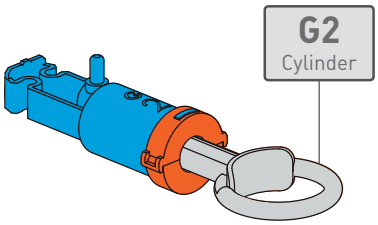

ASSEMBLE THE G1 CYLINDERS

1

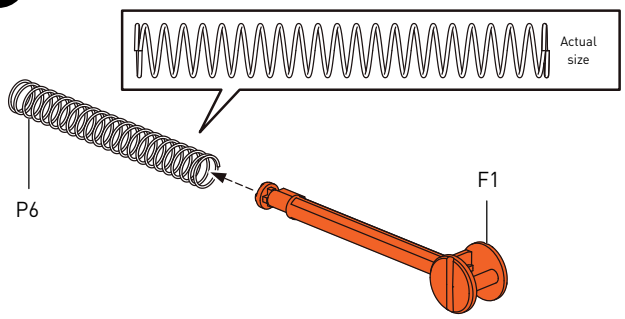

2

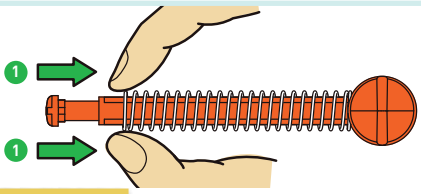

Remove burrs before assembly.

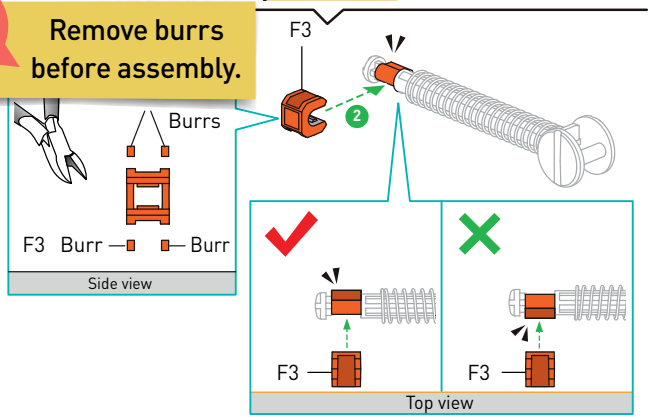

3

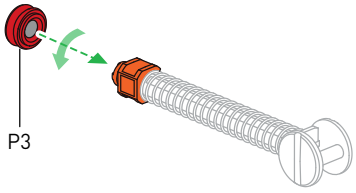



4

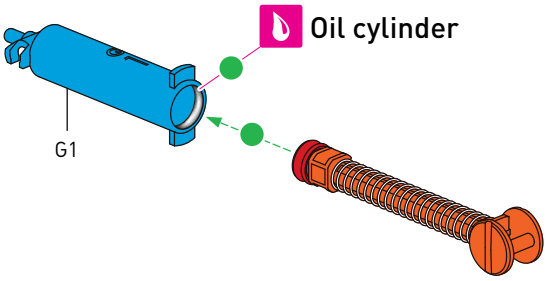

5

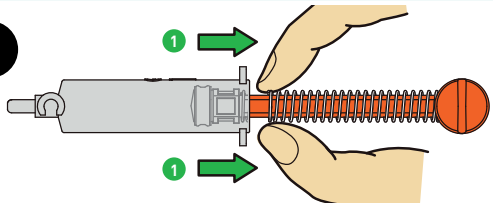

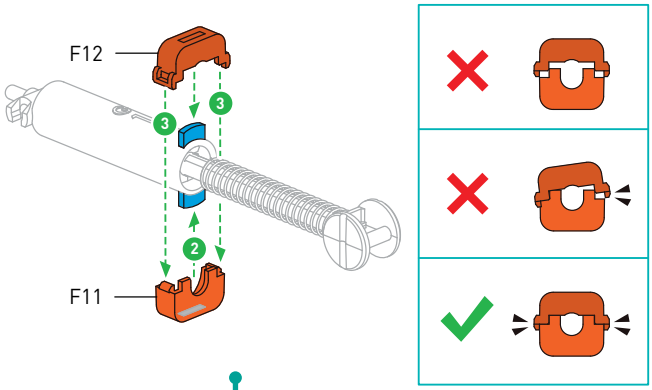

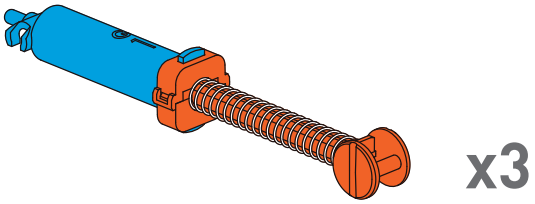

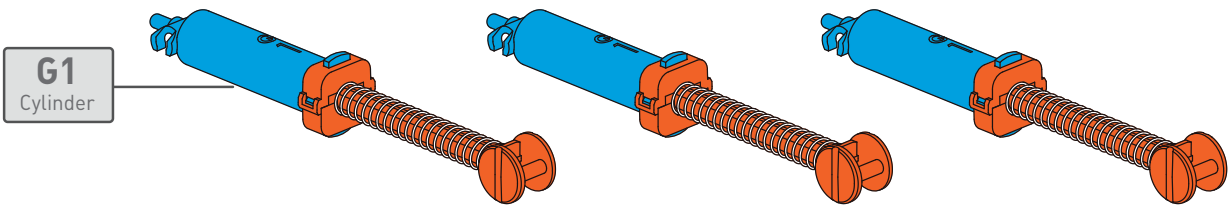

The power of air and water

You will need

- **G2 hydraulic cylinder**
- **Cup of water**

Here's how

1. Pull the piston of the G2 cylinder outward and then seal the opening of the tube connection nozzle with your finger.
2. Now push the piston in. It will slide in about a centimeter or two, but will spring back when released.
3. Now, fill the G2 cylinder completely with water. To do this, dip the opening of the tube connection nozzle into a cup filled with water, push the piston all the way in, and then pull it out again.
4. Again, seal the opening of the tube connection nozzle with your finger and push the piston in. You will hardly be able to move it in at all, and you will not feel the same springy, elastic feeling you felt when the cylinder was filled with air.

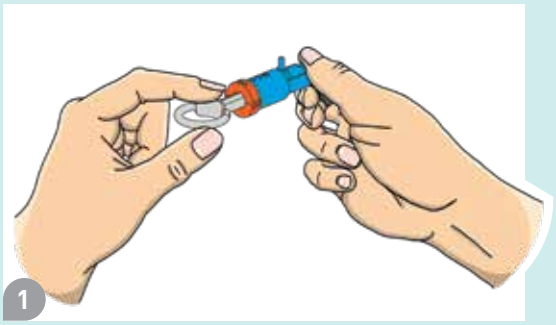



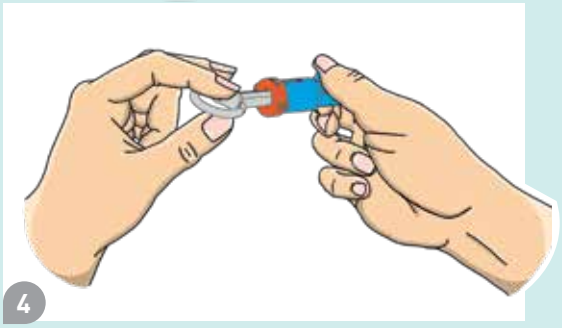

WHAT'S HAPPENING?

Air is elastic. Air-filled balls used in sports take advantage of this scientific fact. The elastic air in bicycle and car tires absorbs vibrations and shocks while the vehicles are moving.

Unlike air, water can hardly be squeezed. This applies generally to all liquids, including oil. Under the influence of pressure, the density of all real substances changes, but especially with gases. This is much less the case with liquids and solids than with air. The amount by which a substance can be compressed is referred to as its **compressibility**.

EXPERIMENT 2

Hydraulic transmission

You will need

- G1 hydraulic cylinder
- G3 hydraulic cylinder
- Cup of water

Here's how

1. Attach one of your tubes to the tube connection nozzle on the G1 cylinder.
2. Now dip the free end of the tube into a cup filled with water. Push the piston all the way in and pull it out again so that the cylinder is filled with water.
3. Remove the free end of the tube from the cup and carefully push the piston of the cylinder in until there is no more air in the tube and cylinder. Then immerse the tube in the water again and pull the piston out of the cylinder as far as it will go.
4. Attach the free end of the tube to the tube connection nozzle on the G3 cylinder.
5. Now push the piston of G1 inward, and the piston of G3 will move outward accordingly. Try to block this outward movement: You will feel the force you exert on one piston transmitted to the other piston.
6. Empty the water from the cylinders and repeat the experiment with air. Can you move the G3 piston by pushing on the G1 piston? Is it the same or different?

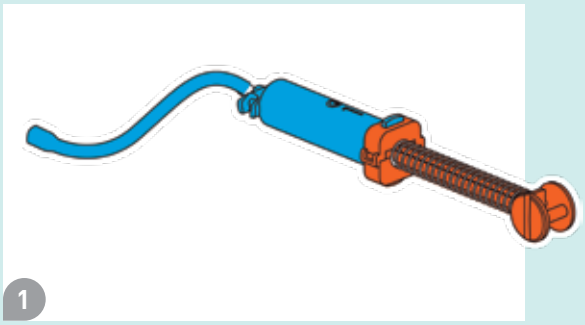



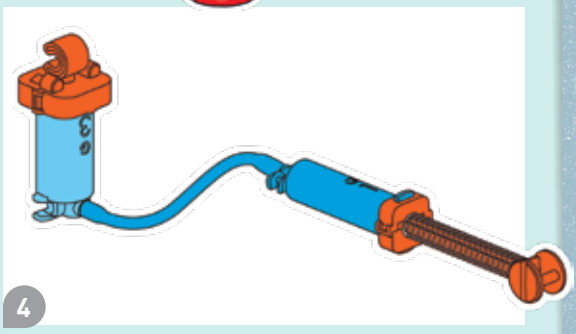

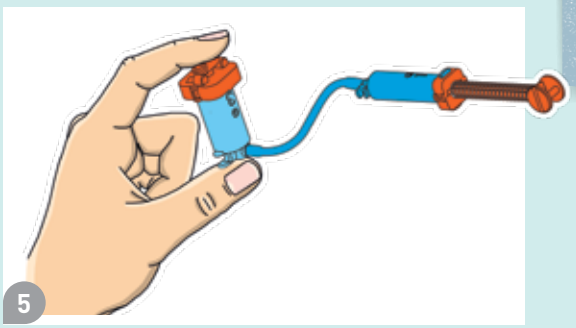

KEYWORDS

DID YOU KNOW ...

... that this method of power transmission is widely used in technology? Devices that work with compressed air are called **pneumatic;** those with liquids such as water or (much more often) special oils are called **hydraulic.** You can find out more about this on page 24.

WHAT'S HAPPENING?

The force with which you push in on the piston of the G1 cylinder is transmitted from the water or air to the piston of the G3 cylinder. However, some of the force is lost in the air-filled system because the air compresses. Since the **compressibility** of water is lower, the hydraulic cylinders in your mega cyborg hand are filled with water to make it more powerful.

CONNECT G1 TO G3

1

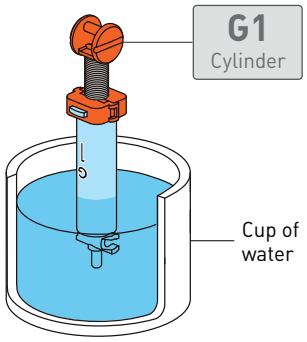

1. Pull the piston outward.
2. Push the piston fully into the cylinder.
3. Repeat steps 1 and 2 to fill the cylinder completely with water.

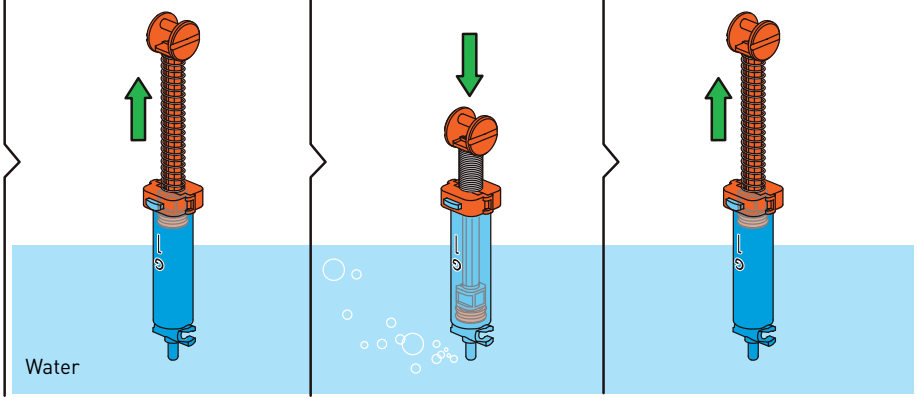

2

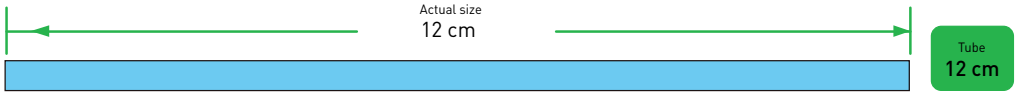

3

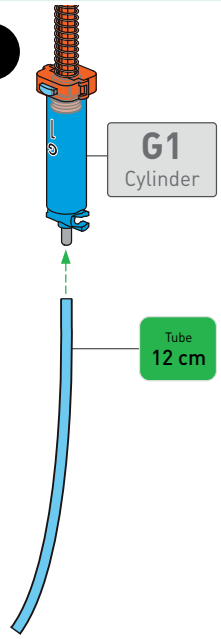

Fill the cylinder and tube completely with water.

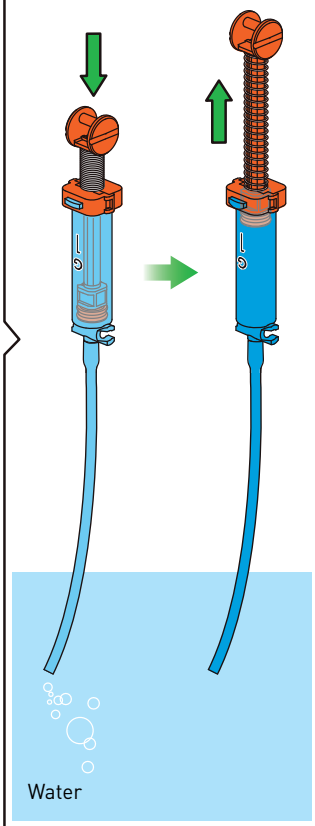

4

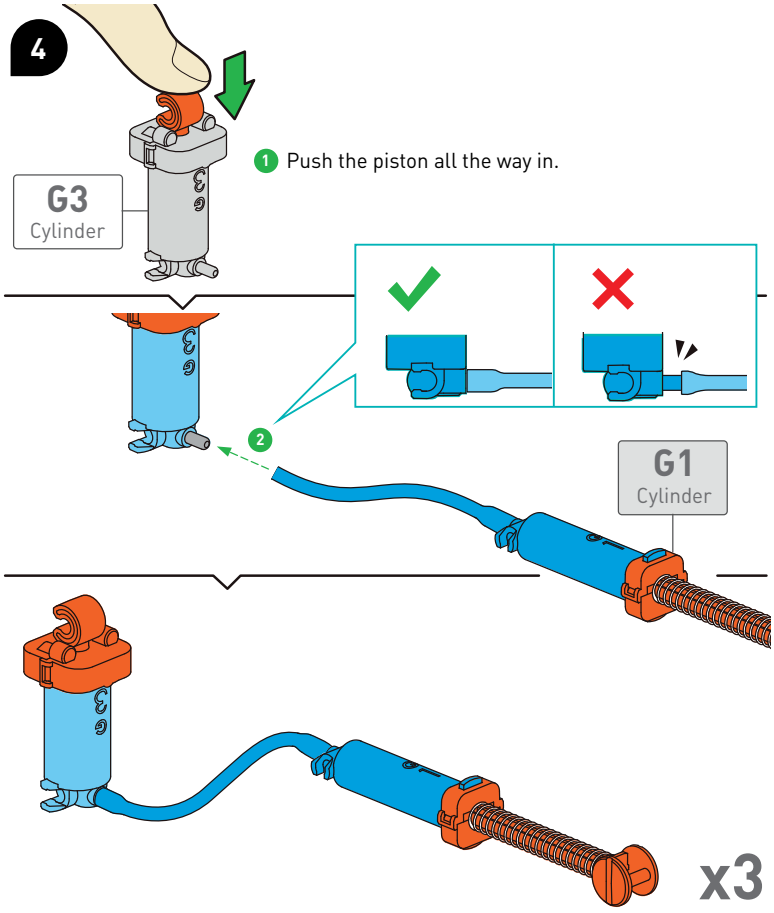

Hydraulic system A

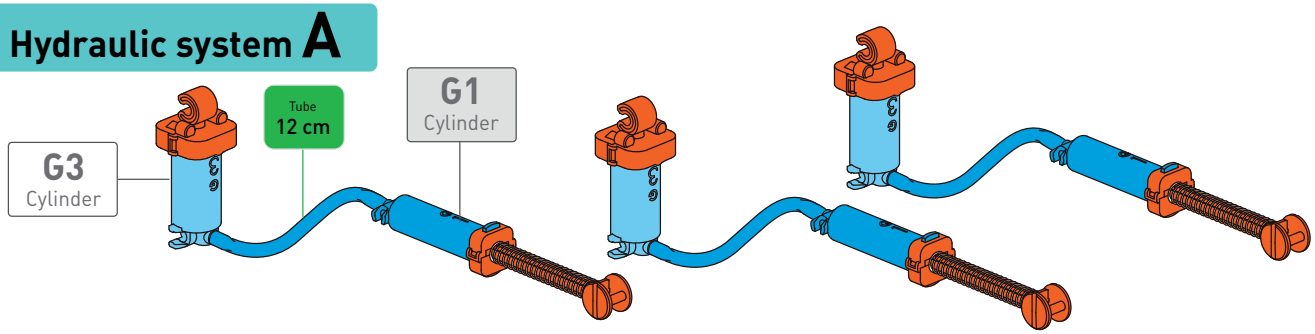

CONNECT G2 TO G3

1

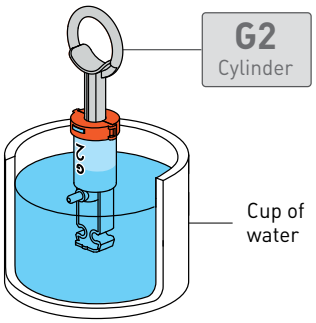

1 Pull the piston out.

2 Push the piston fully into the cylinder.

3 Repeat steps 1 and 2 to fill the cylinder completely with water.

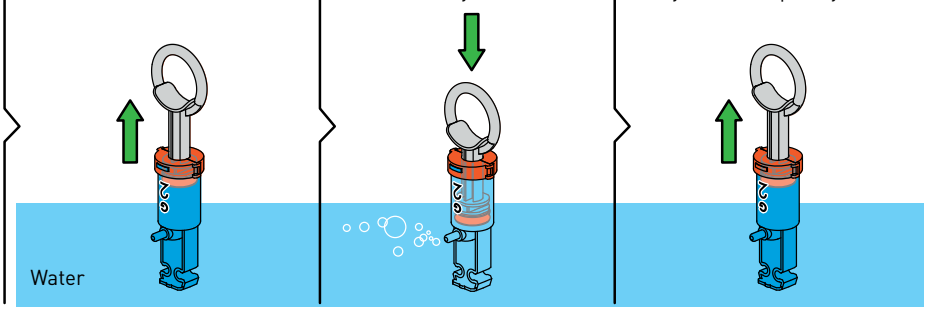

2

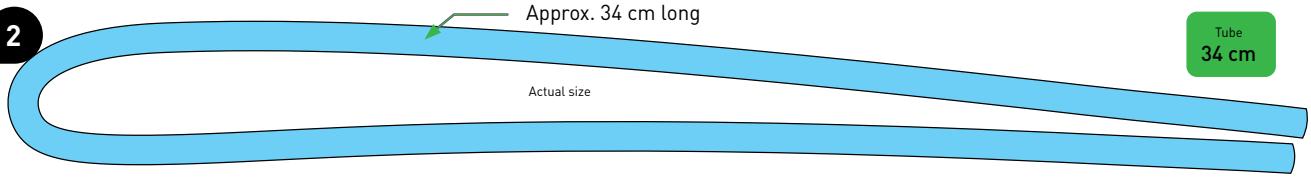

3

Fill the cylinder and tube completely with water.

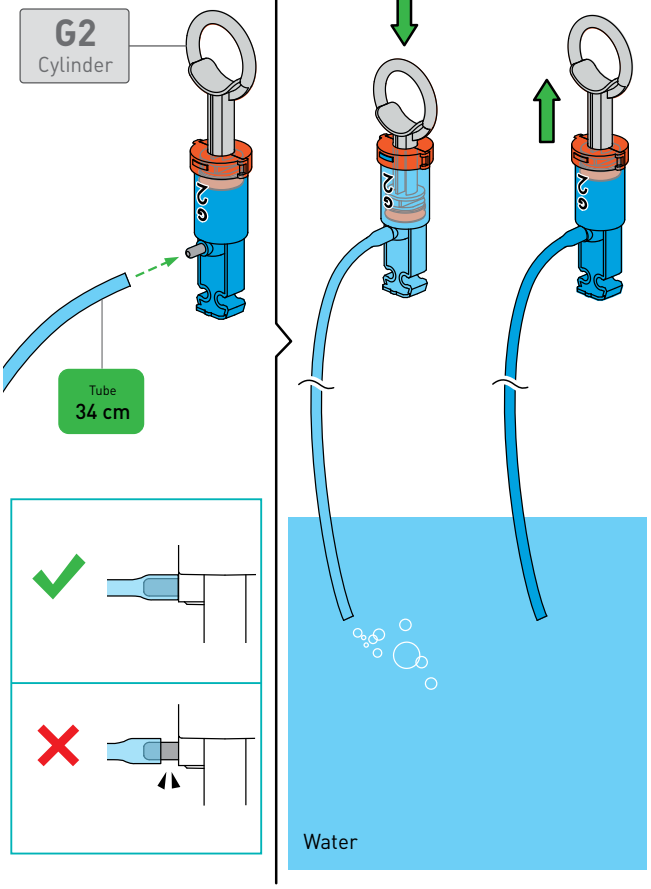

4

1 Push the piston all the way in.

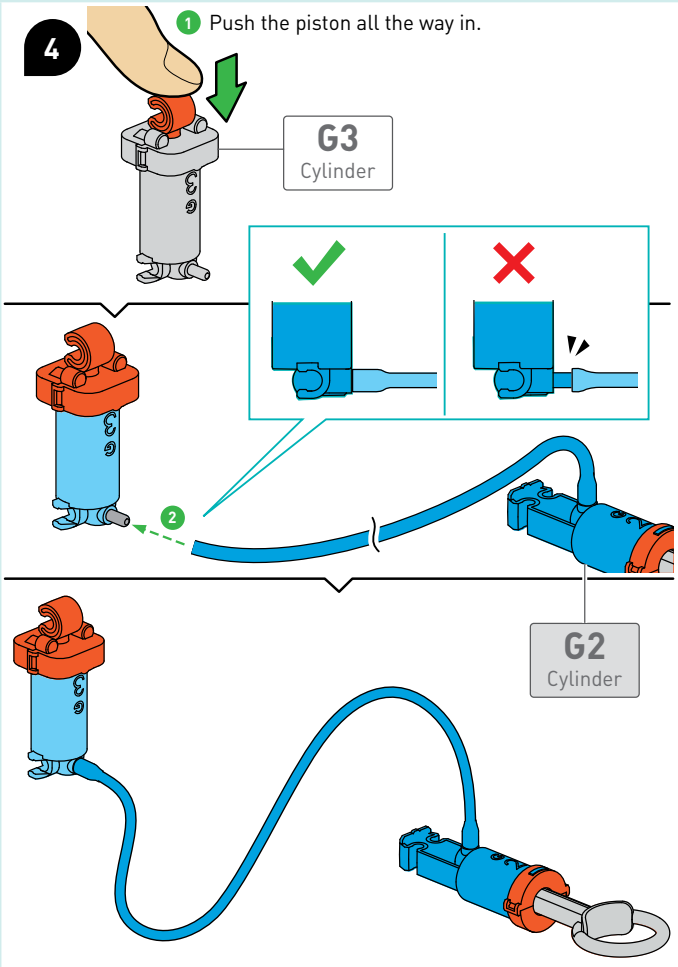

Hydraulic system B

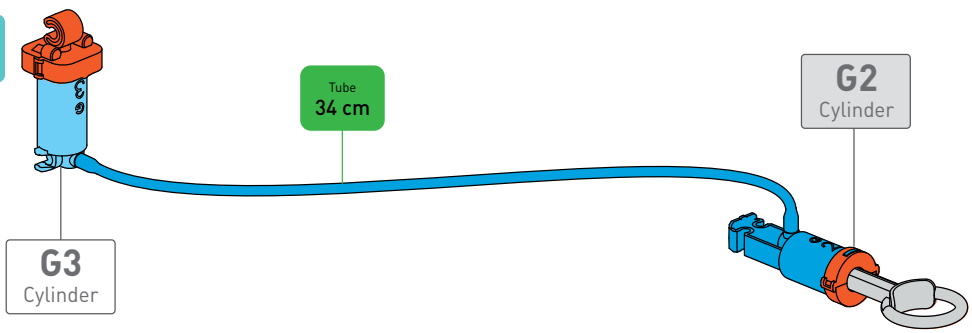

CHECK IT OUT

Pneumatics and hydraulics

Pneumatic and hydraulic systems are used in many different types of modern-day machines. They are used when power must be transferred from one location to another. Both systems have specific advantages and disadvantages and are used depending on the application.



I have hydraulic systems on board.

PNEUMATIC SYSTEMS

WORK WITH COMPRESSED AIR, GENERATED BY COMPRESSORS. ELECTRICALLY CONTROLLED VALVES DIRECT THE COMPRESSED AIR INTO CYLINDERS WITH PISTONS IN THEM. THE PISTONS THEN PERFORM THE DESIRED MOVEMENTS. HOWEVER, THESE SYSTEMS CANNOT EXERT EXCESSIVE FORCES, SINCE AIR CAN BE COMPRESSED. THE ADVANTAGE OF PNEUMATICS IS THAT VERY HIGH OPERATING SPEEDS CAN BE ACHIEVED AND COMPRESSED AIR CAN BE CONTROLLED VERY EASILY.





Hydraulics

If very large forces have to be transmitted, hydraulic systems are usually used. These also work with cylinders, pistons, and valves, like in the mega cyborg hand, but they mostly use special hydraulic oils as a medium, instead of water, because these oils can be put under high pressures. Such systems can be found in excavators, some elevators, numerous commercial vehicles, and in the braking systems in cars.

Computer Control

Larger hydraulic systems are controlled with special computers. A sophisticated program evaluates signals coming from the various sensors in the system and activates valves and electric motors at the right moments.



ASSEMBLING THE THUMB

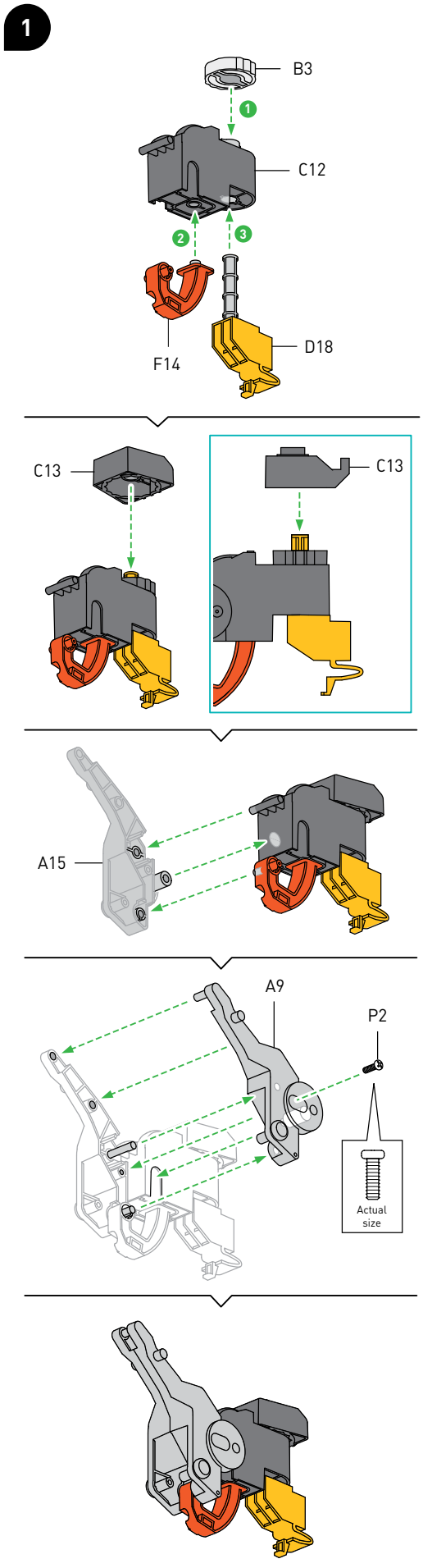

5

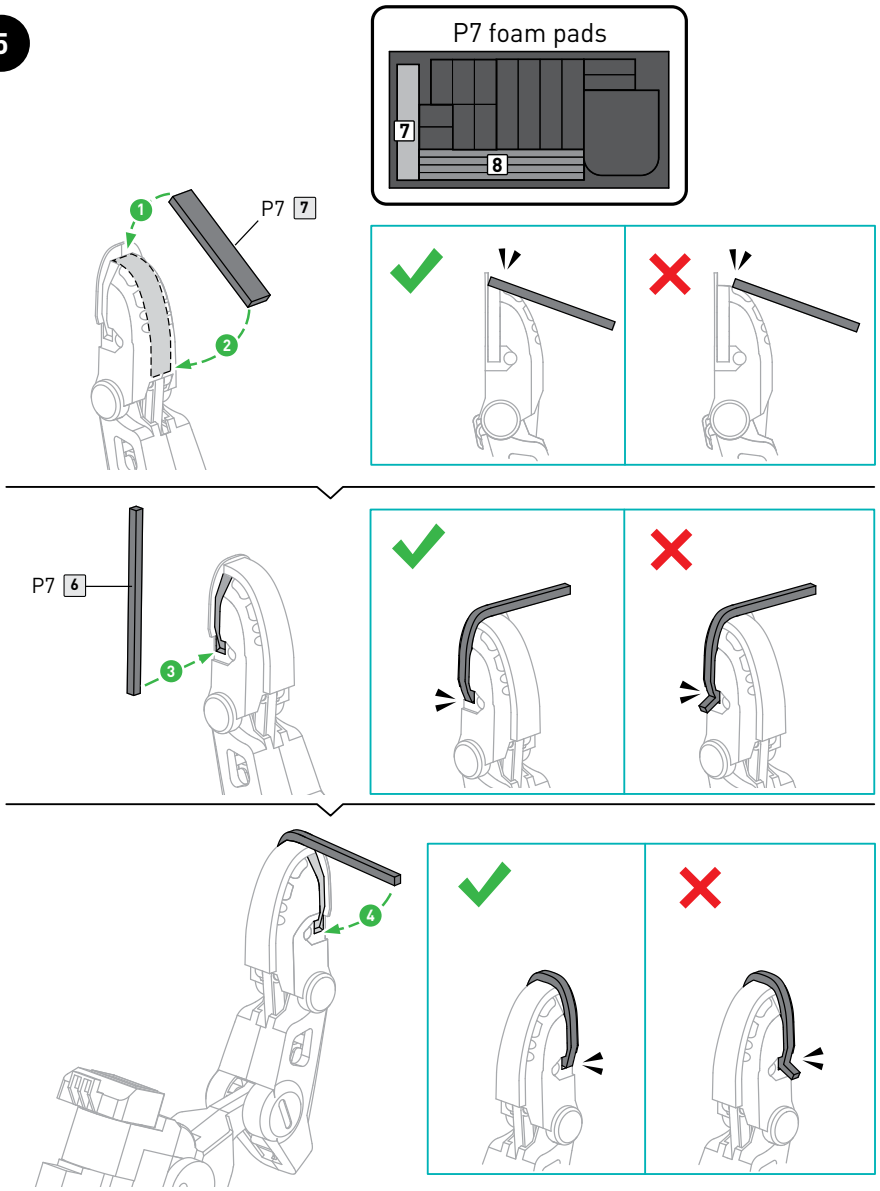
P7 foam pads
7
8
P7 7
1
2
P7 6
3
4

6

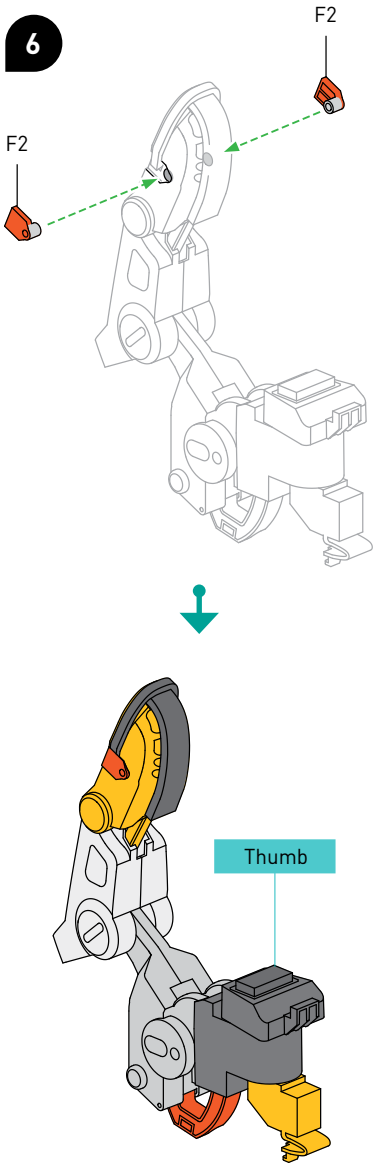
F2
F2
Thumb

7

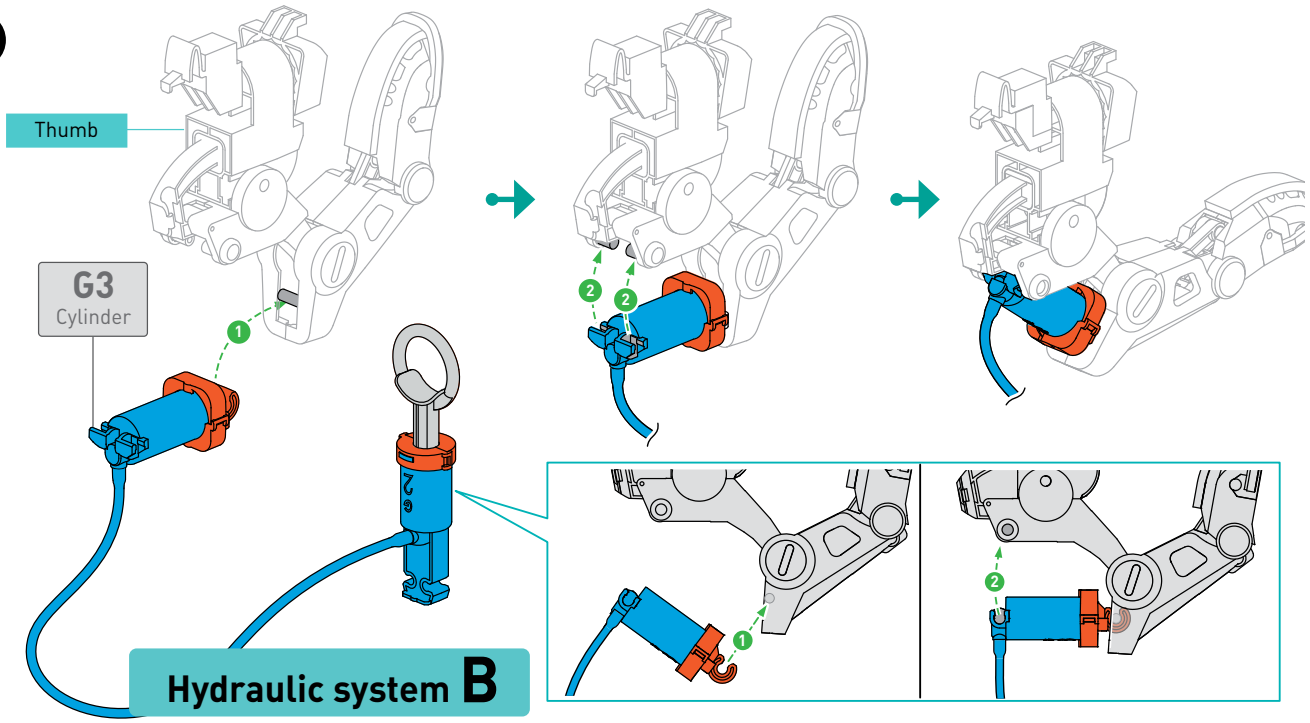
Thumb
G3
Cylinder
1
2
2
Hydraulic system B

8

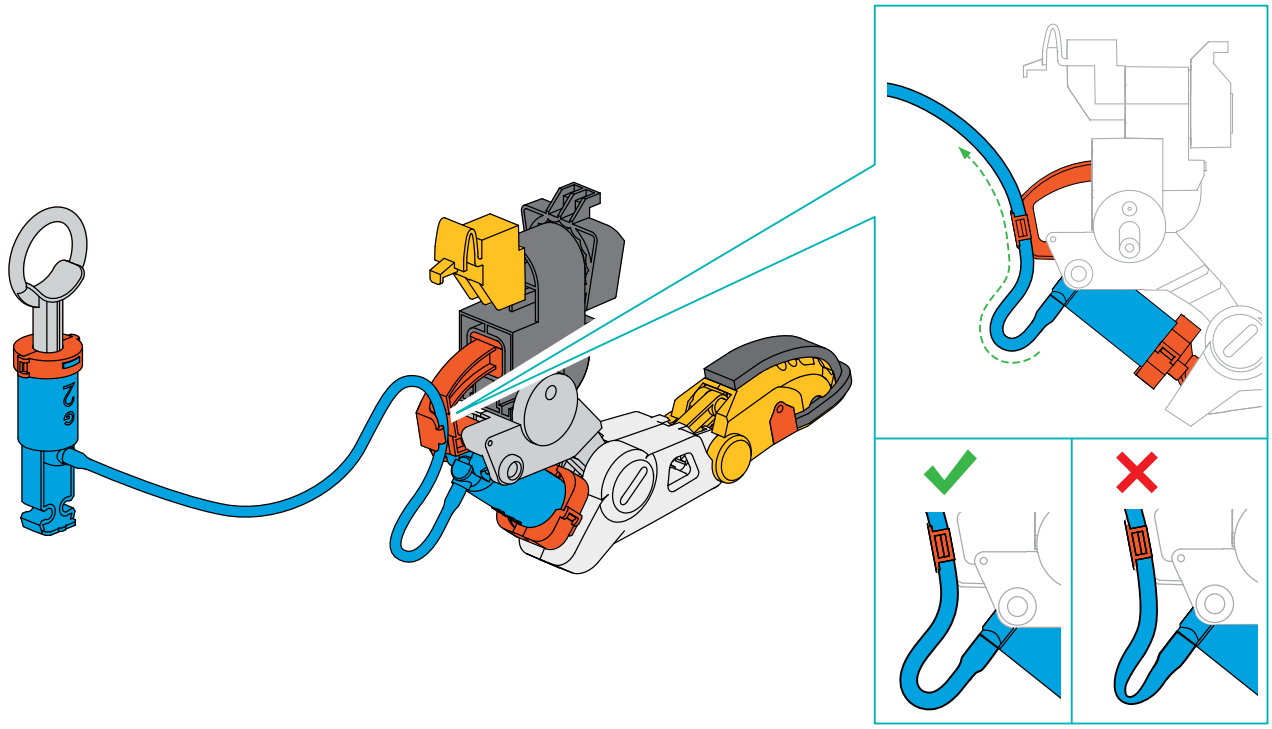

ASSEMBLE THE RAILS

1

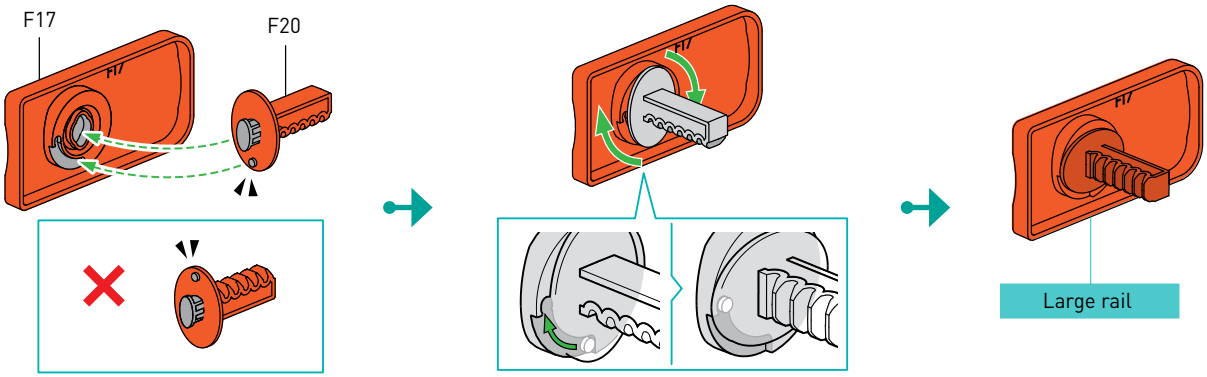

2

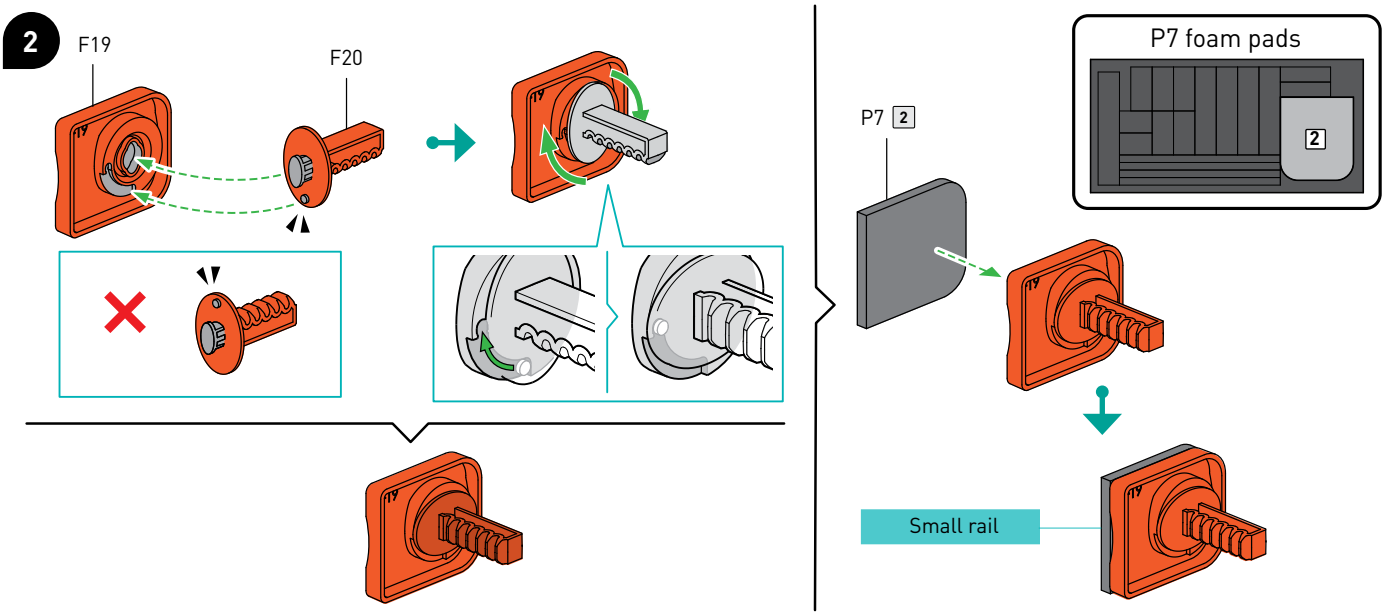

ASSEMBLING THE CYBORG HAND

1

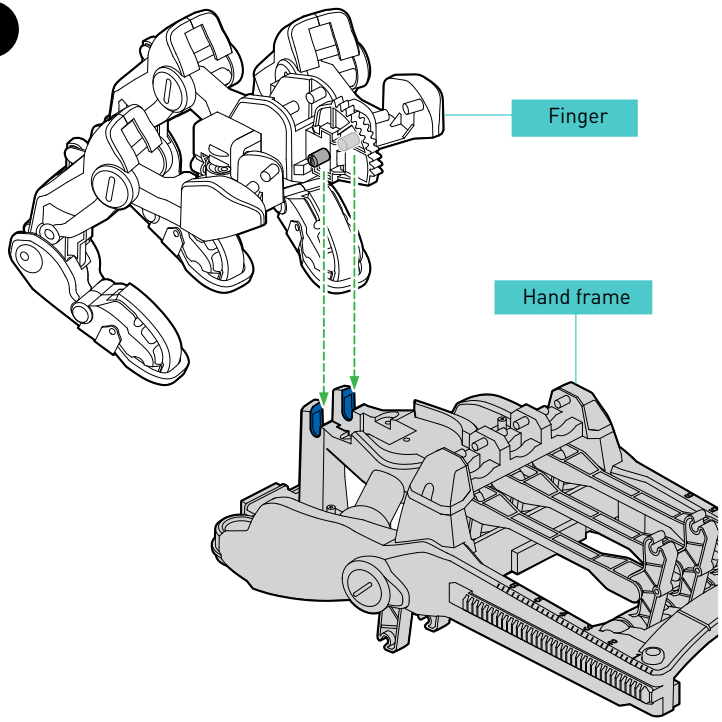

2

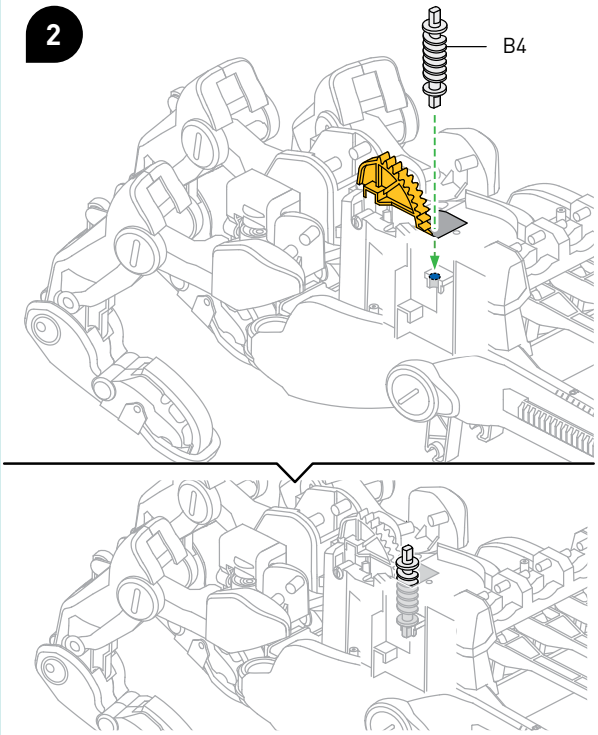

3

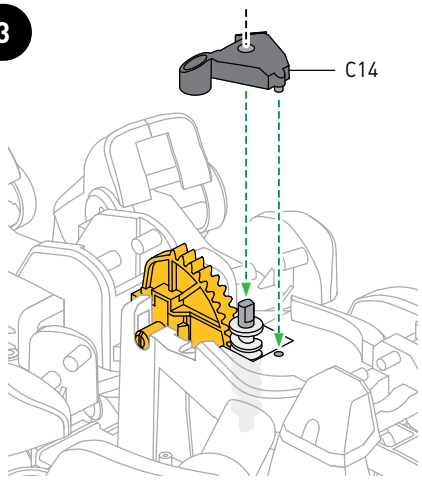

4

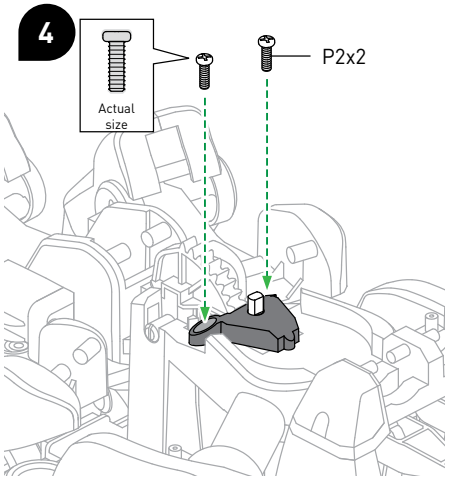

5

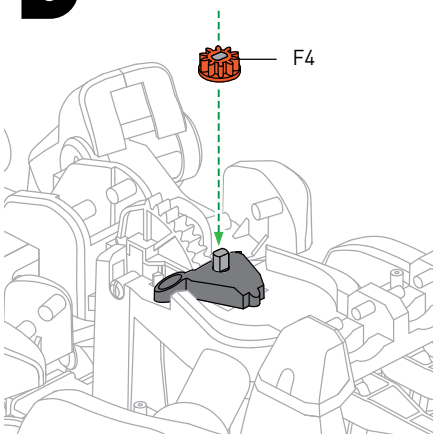

6

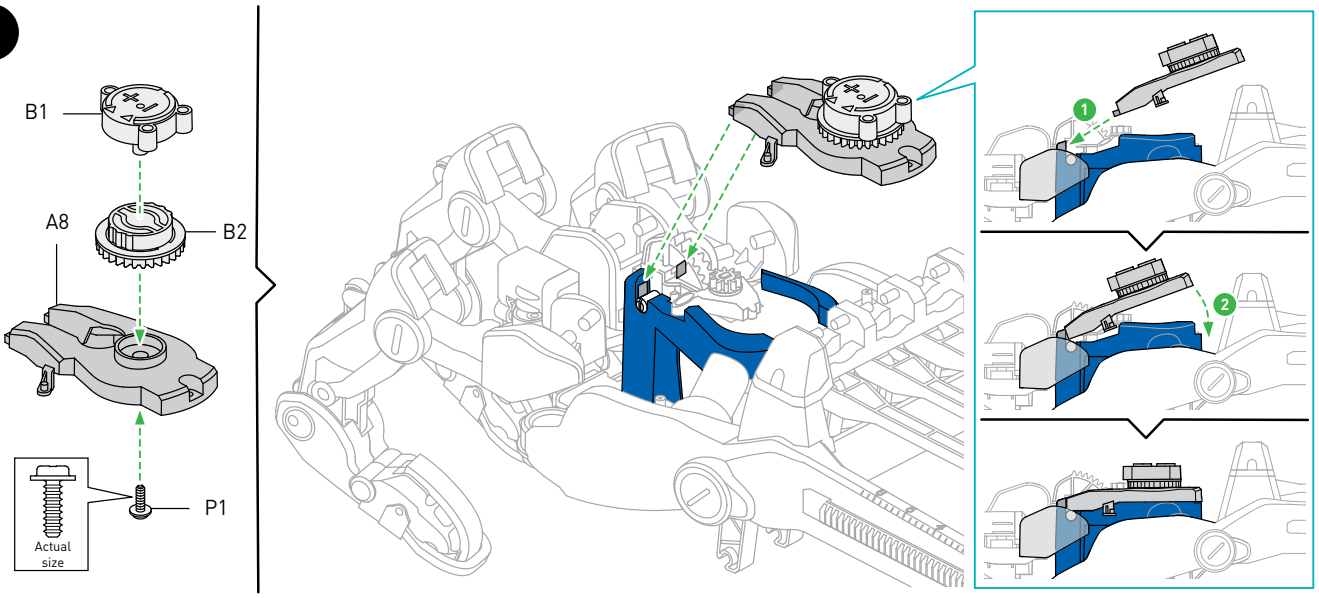

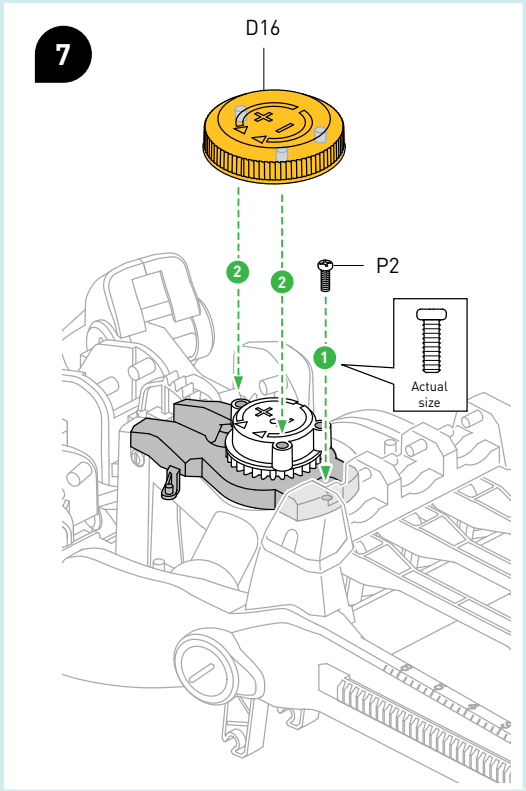
7
D16
P2
Actual size

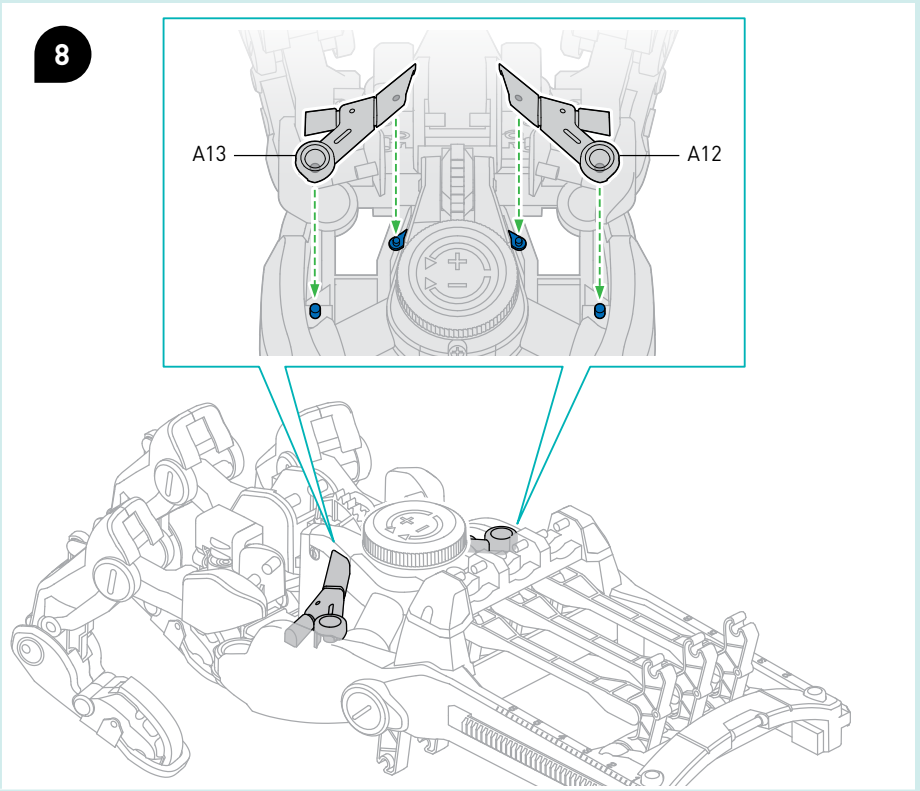
8
A13
A12

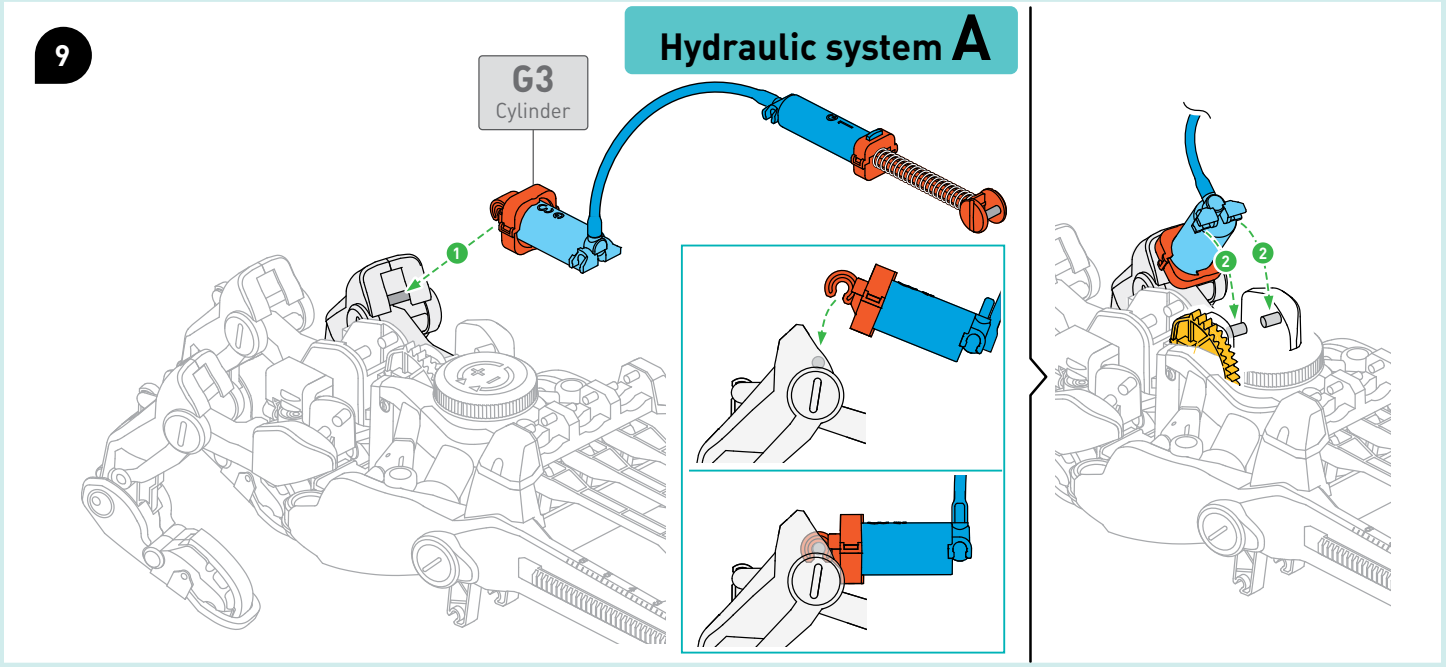
9
Hydraulic system A
G3
Cylinder

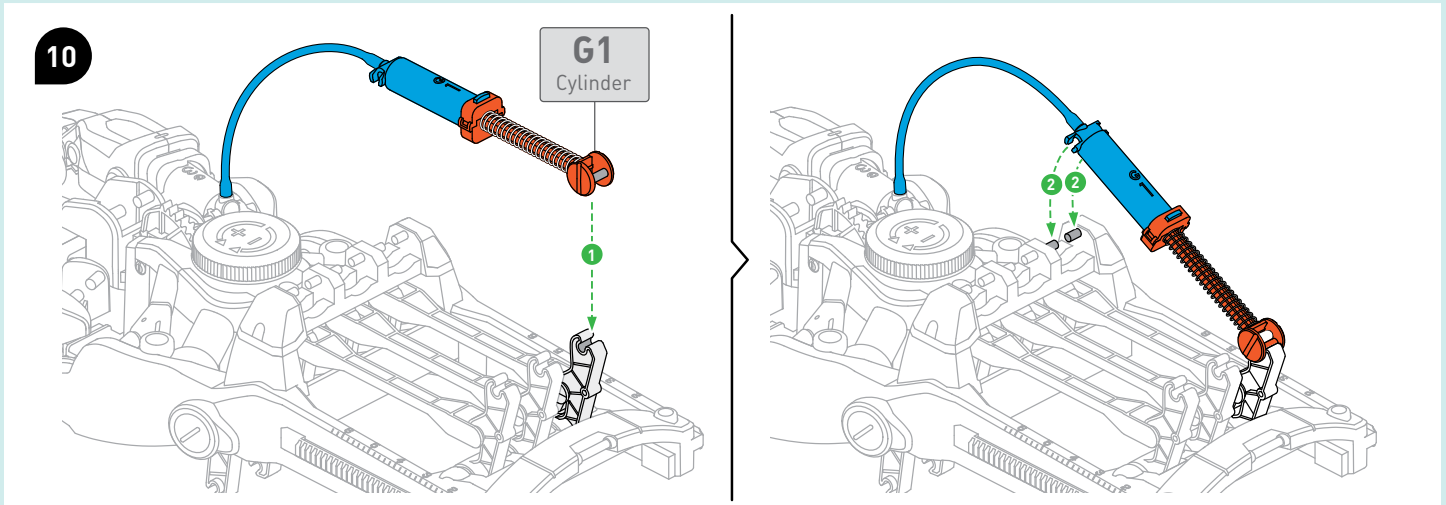
10
G1
Cylinder

11

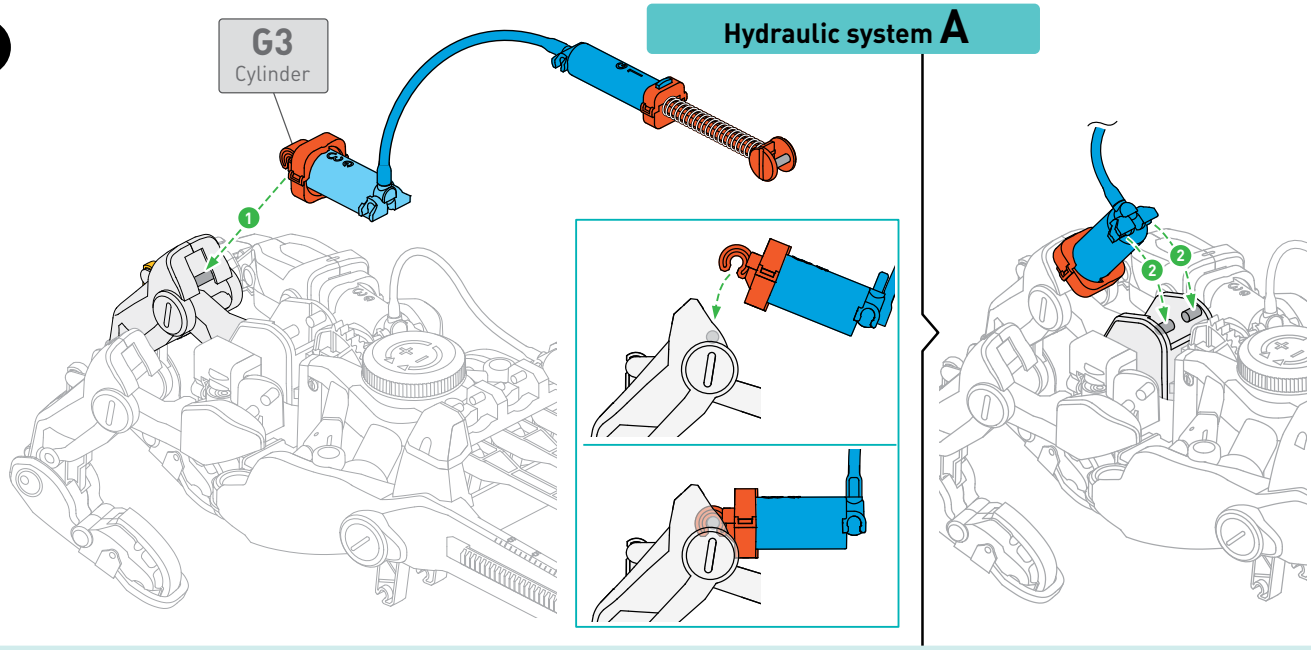
G3
Cylinder
Hydraulic system A
1
2
2

12

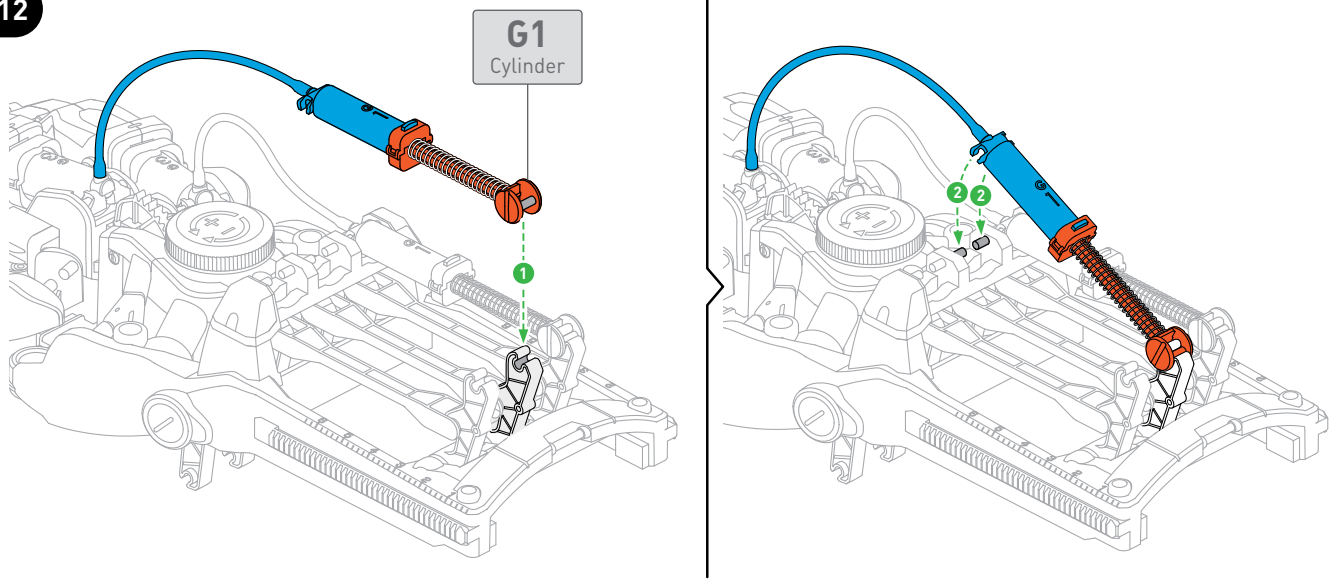
G1
Cylinder
1
2
2

13

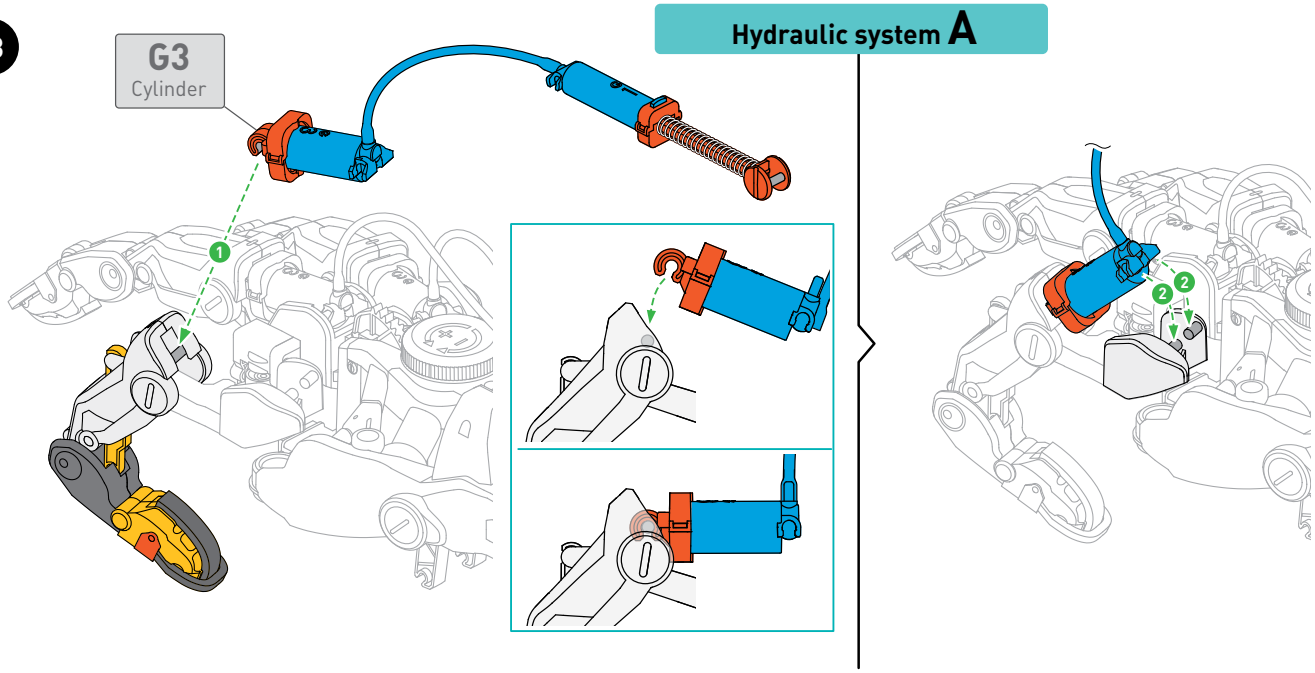
G3
Cylinder
Hydraulic system A
1
2
2

14

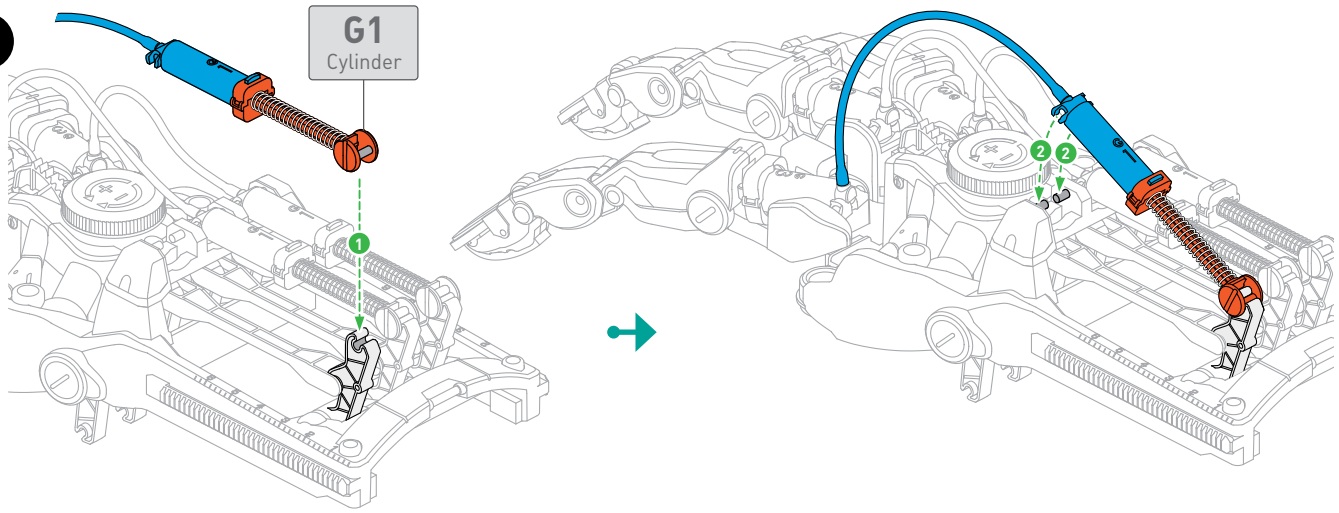

15

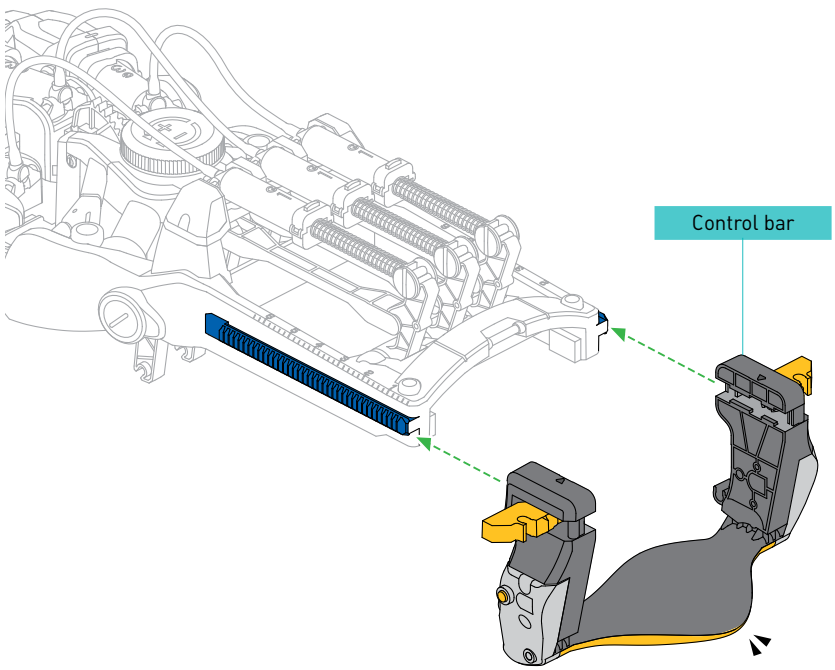

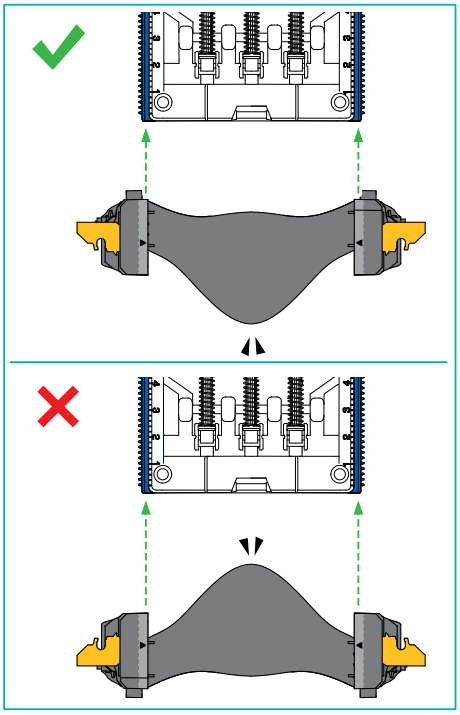

16

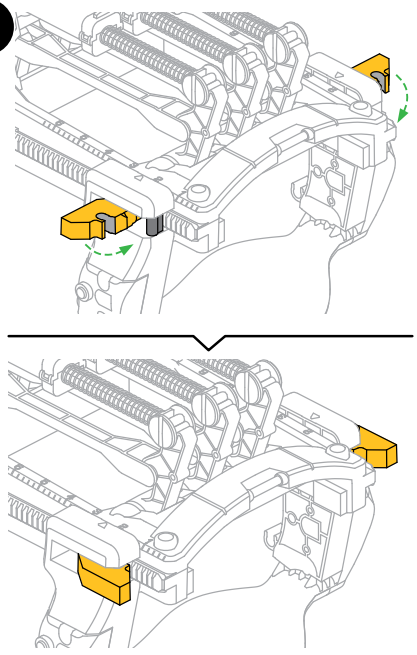

17

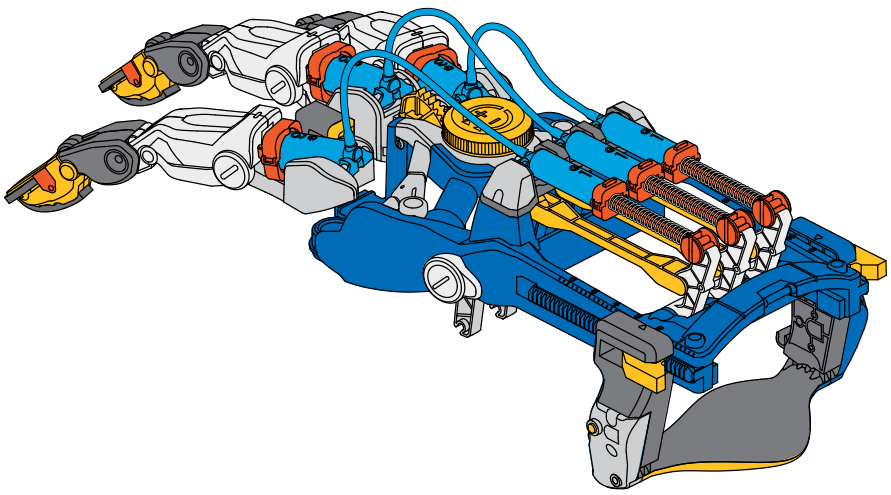

RIGHT-HANDED CONFIGURATION

For the left-handed configuration, skip ahead to page 34.

1

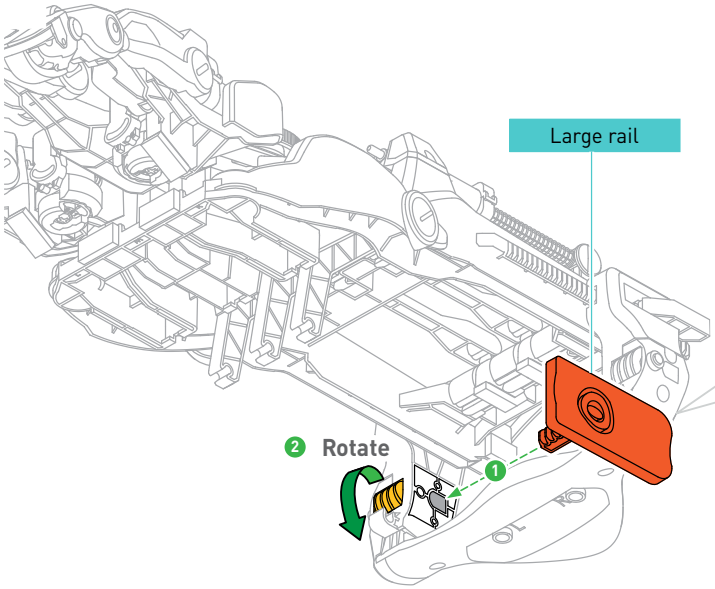

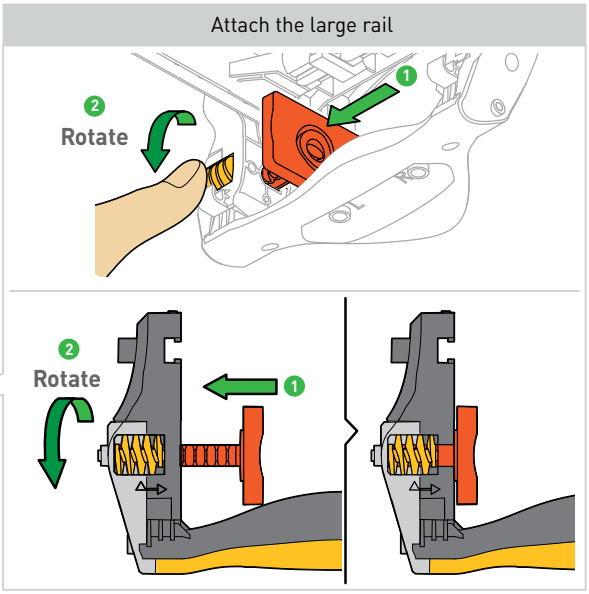

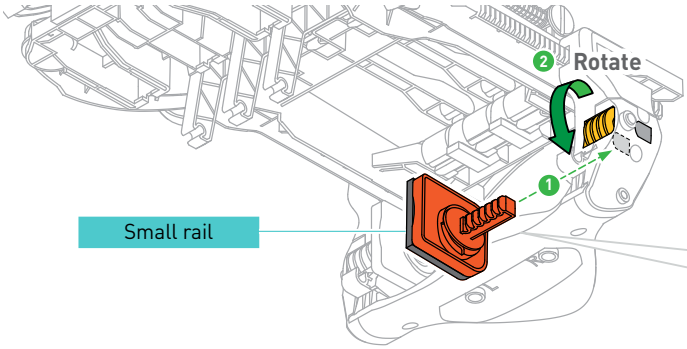

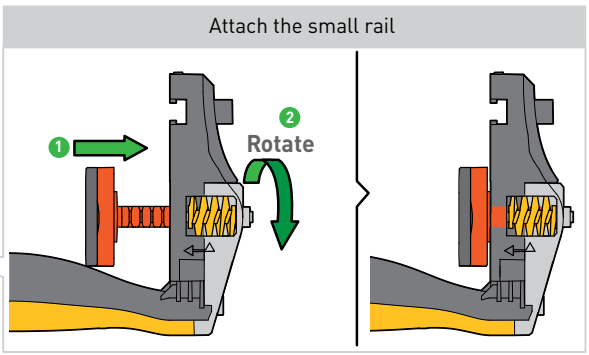

2

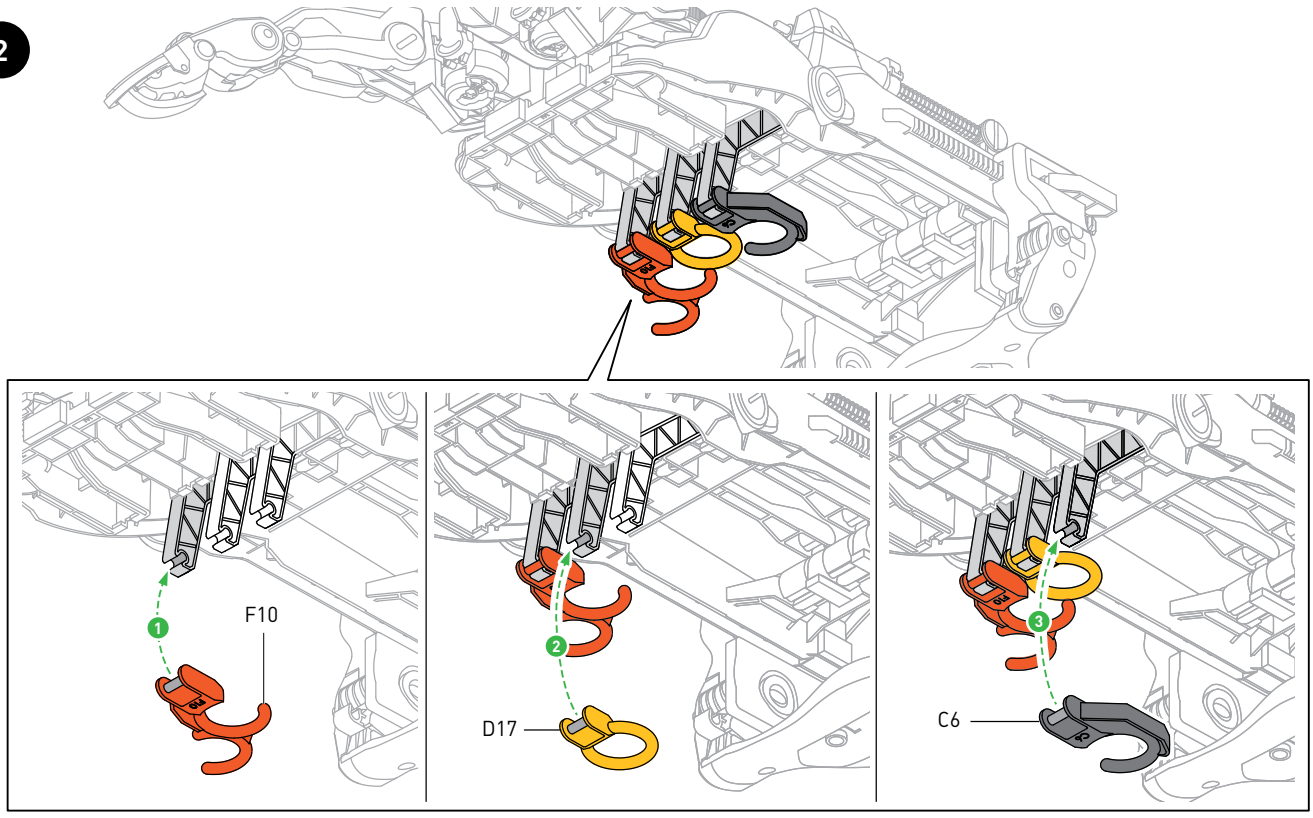

3

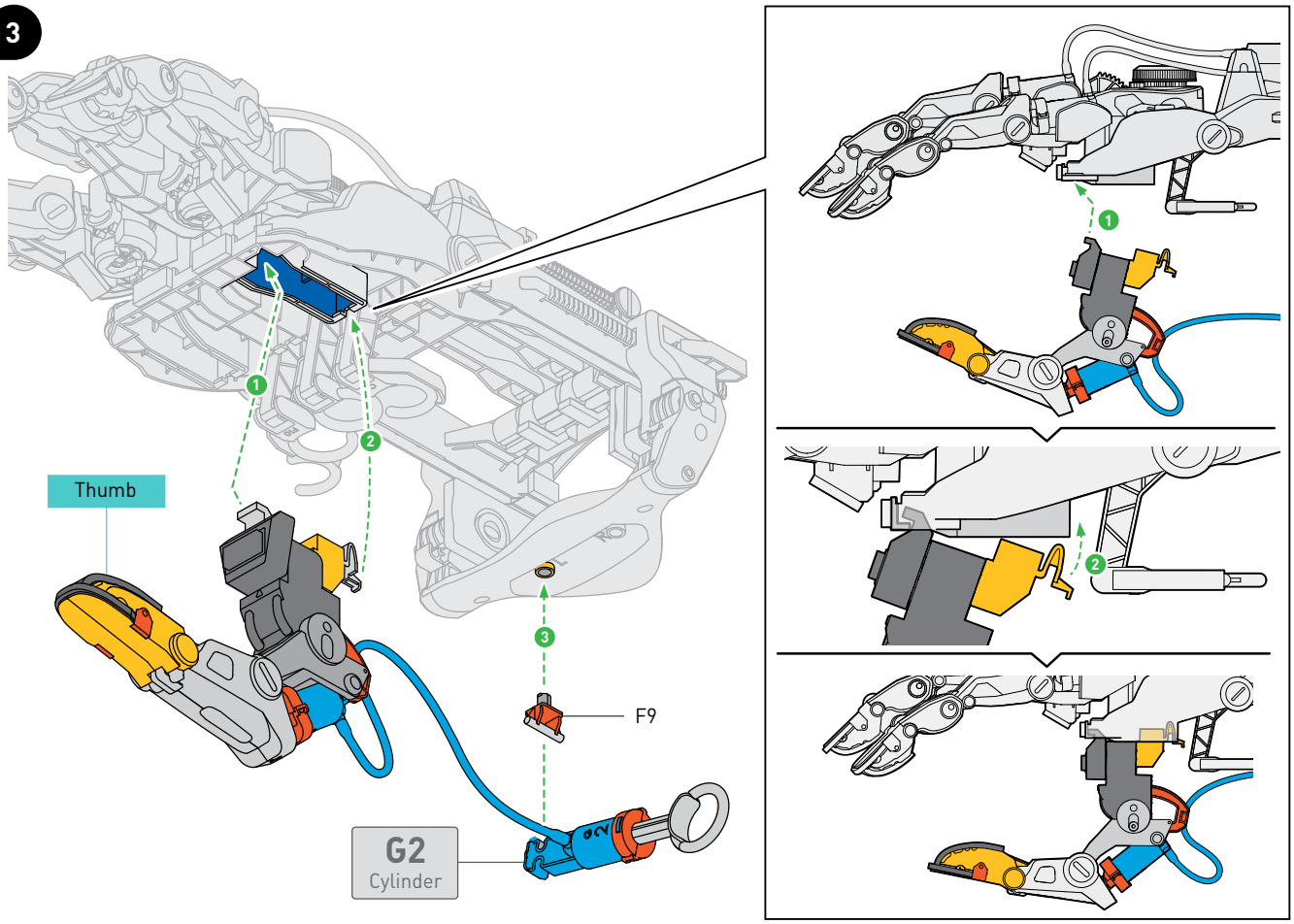

4

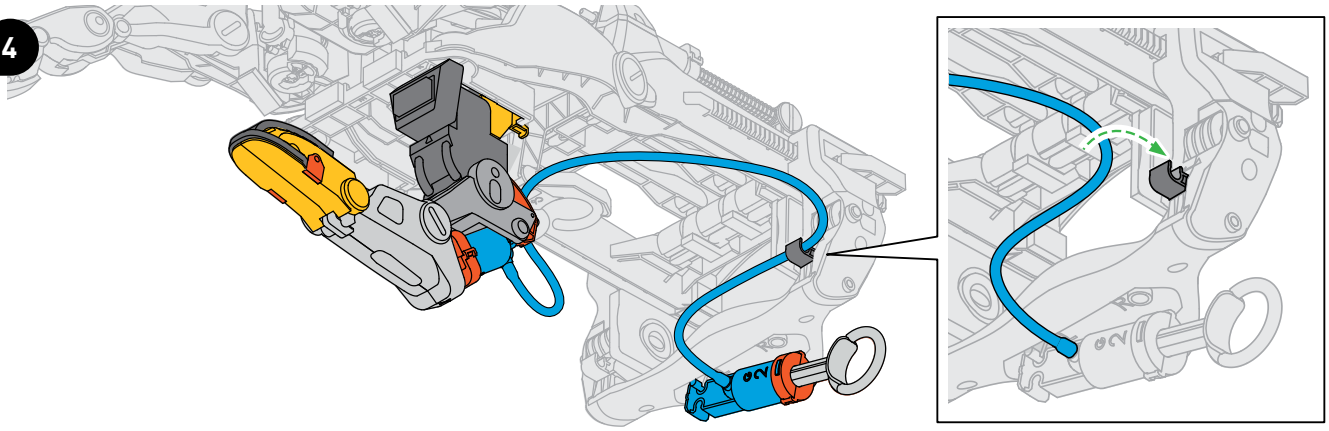

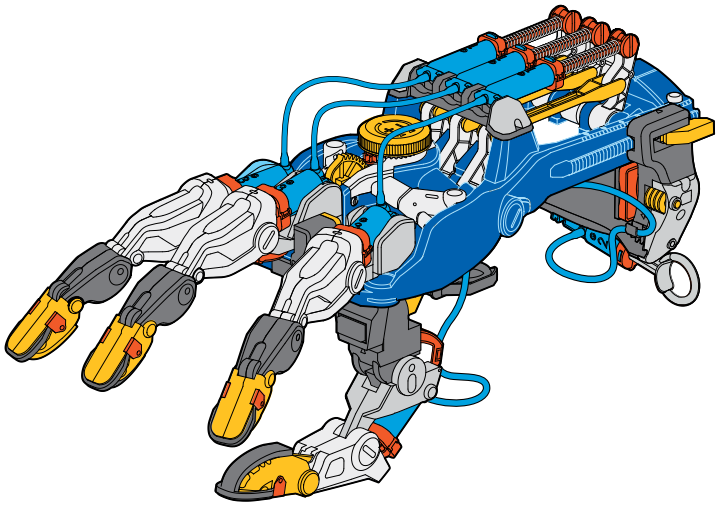

If you ever want to remove the thumb, here's how:

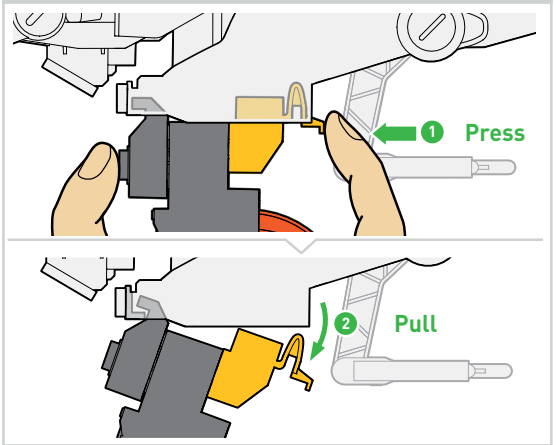

LEFT-HANDED CONFIGURATION

For the right-handed configuration, go back to page 32.

1

Attach the large rail

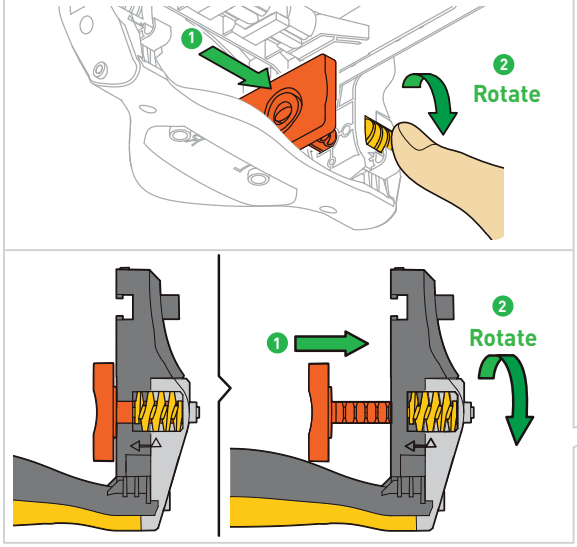

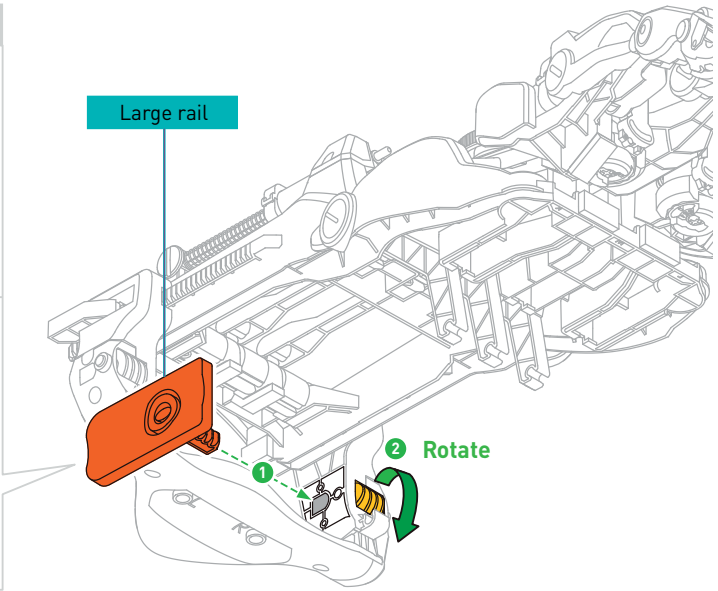

Attach the small rail

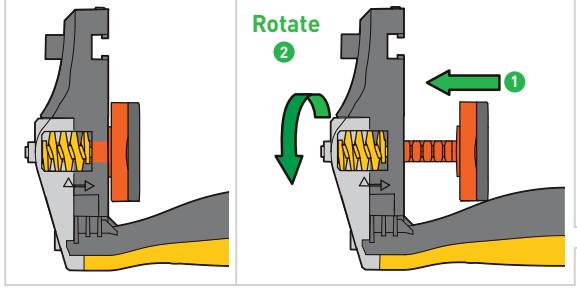

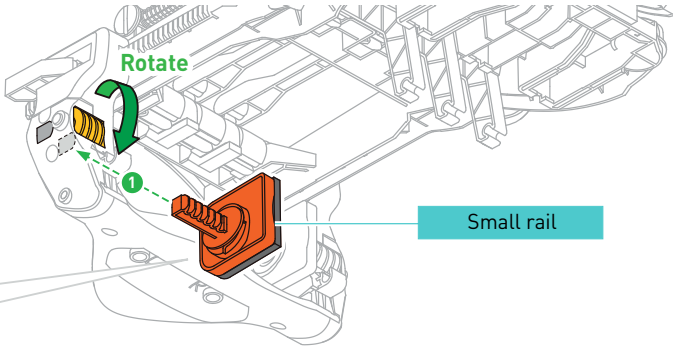

2

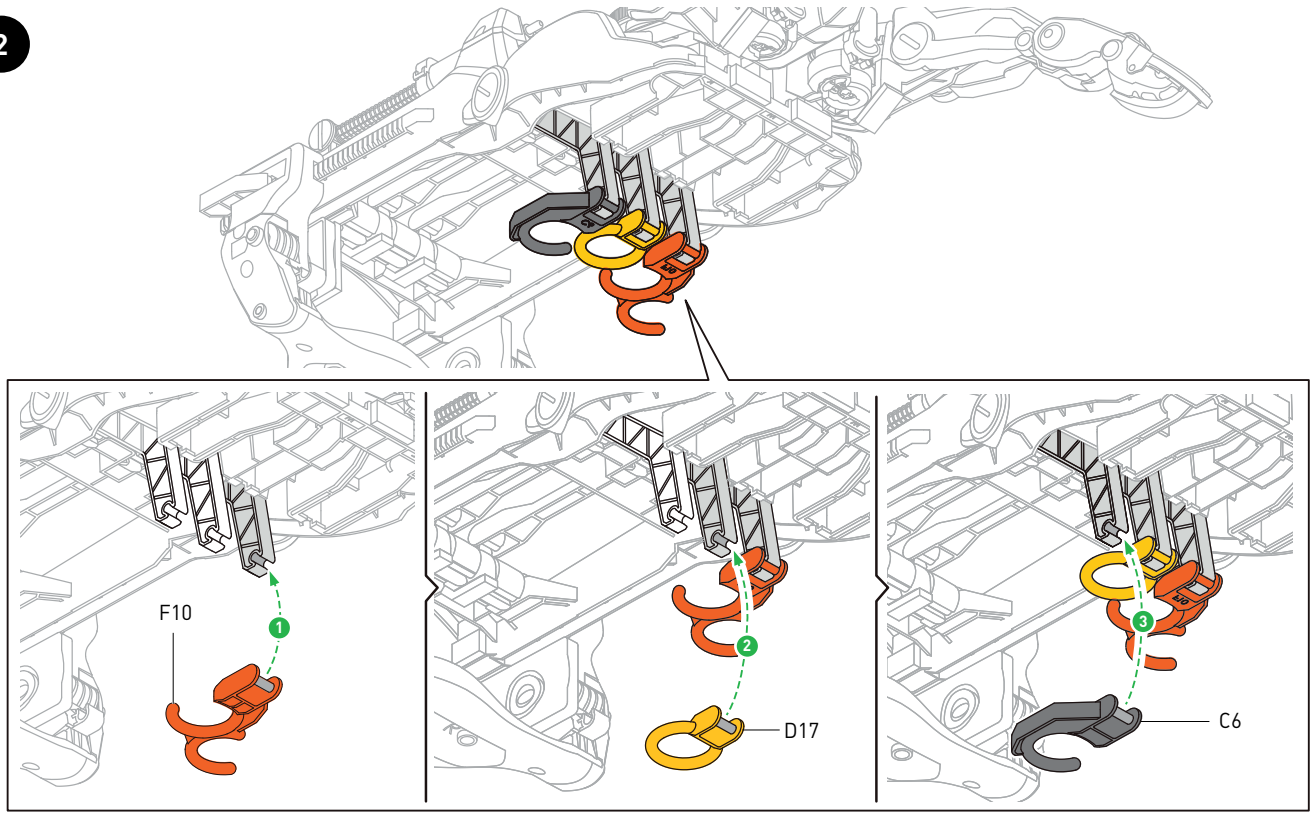

3

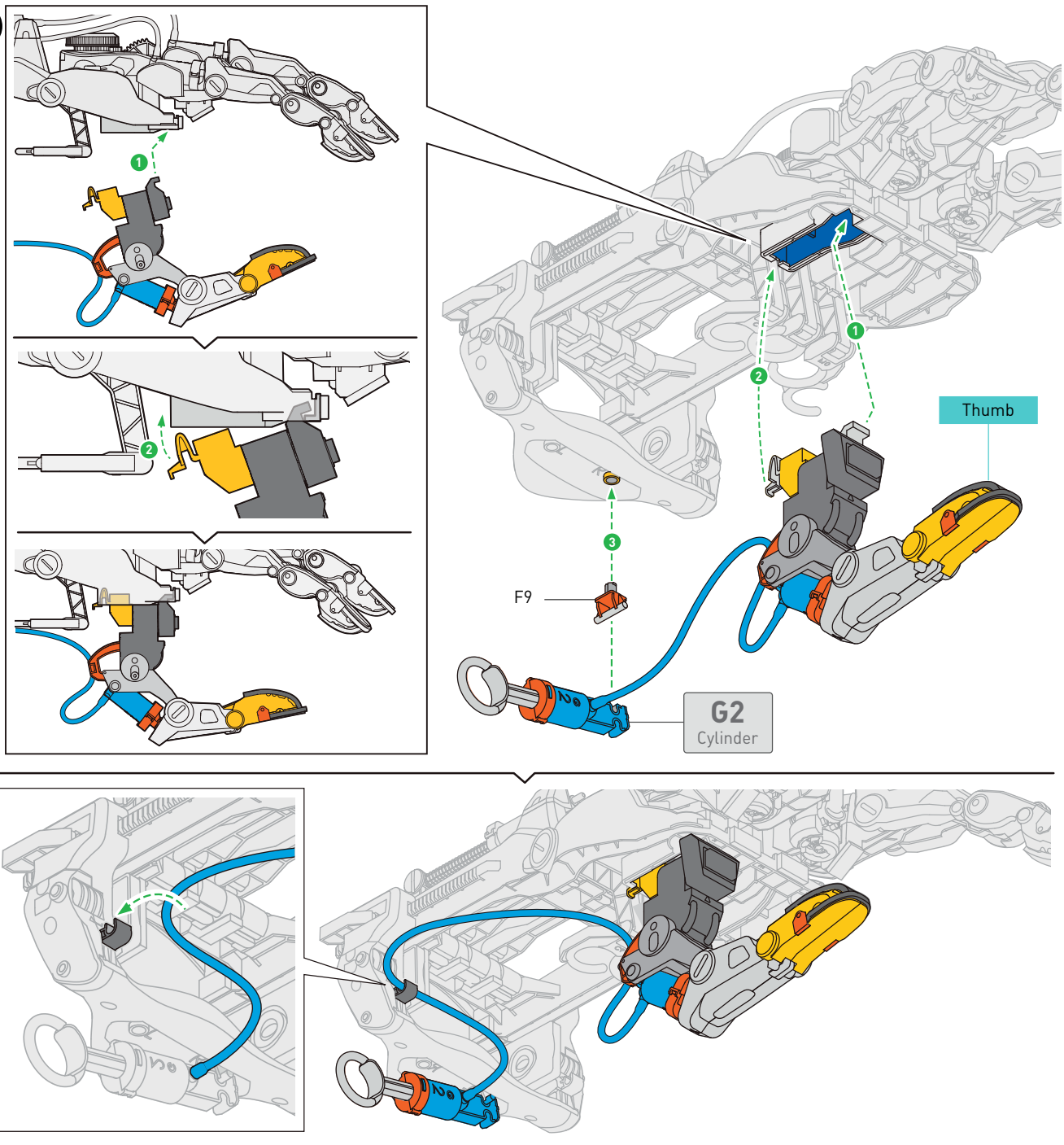

4

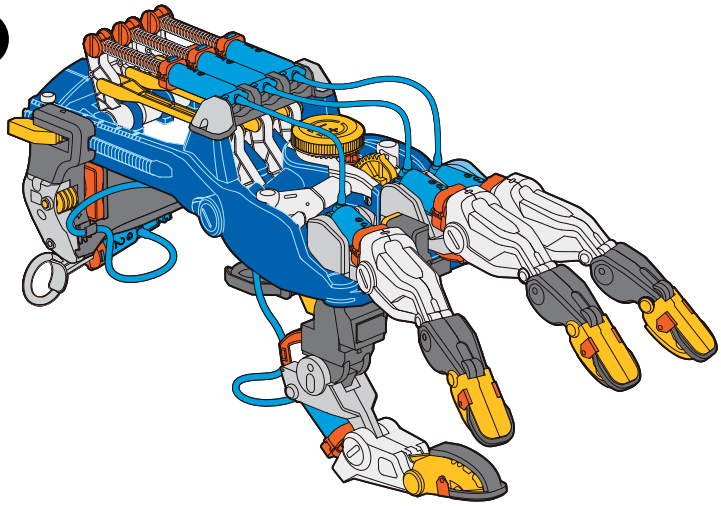

If you ever want to remove the thumb, here's how:

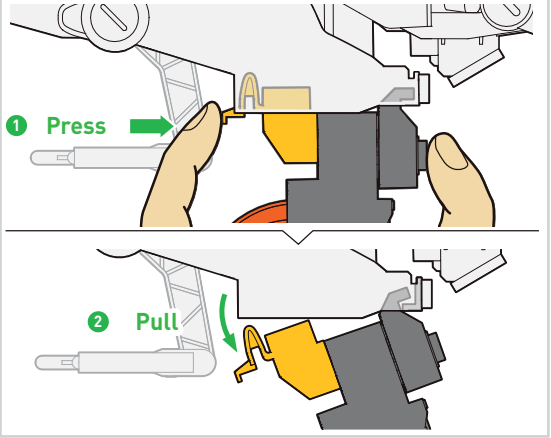


THE MEGA CYBORG HAND
OK. LET'S TRY THIS AGAIN ...
HA!
I AM IMPRESSED WITH THE CAPABILITIES OF YOUR MECHANICAL DEVICE.
GEE, THANKS! HEY, LOOK: THUMBS UP, DUDE!
NOW WE JUST NEED ONE MORE CRYSTAL. THEN WE CAN LEAVE!
SOUNDS GOOD TO ME ... AAAAAAAAHHH!
EEK! A SCARY ROBOT! DO SOMETHING, IZZY!
BEEP BEEP!

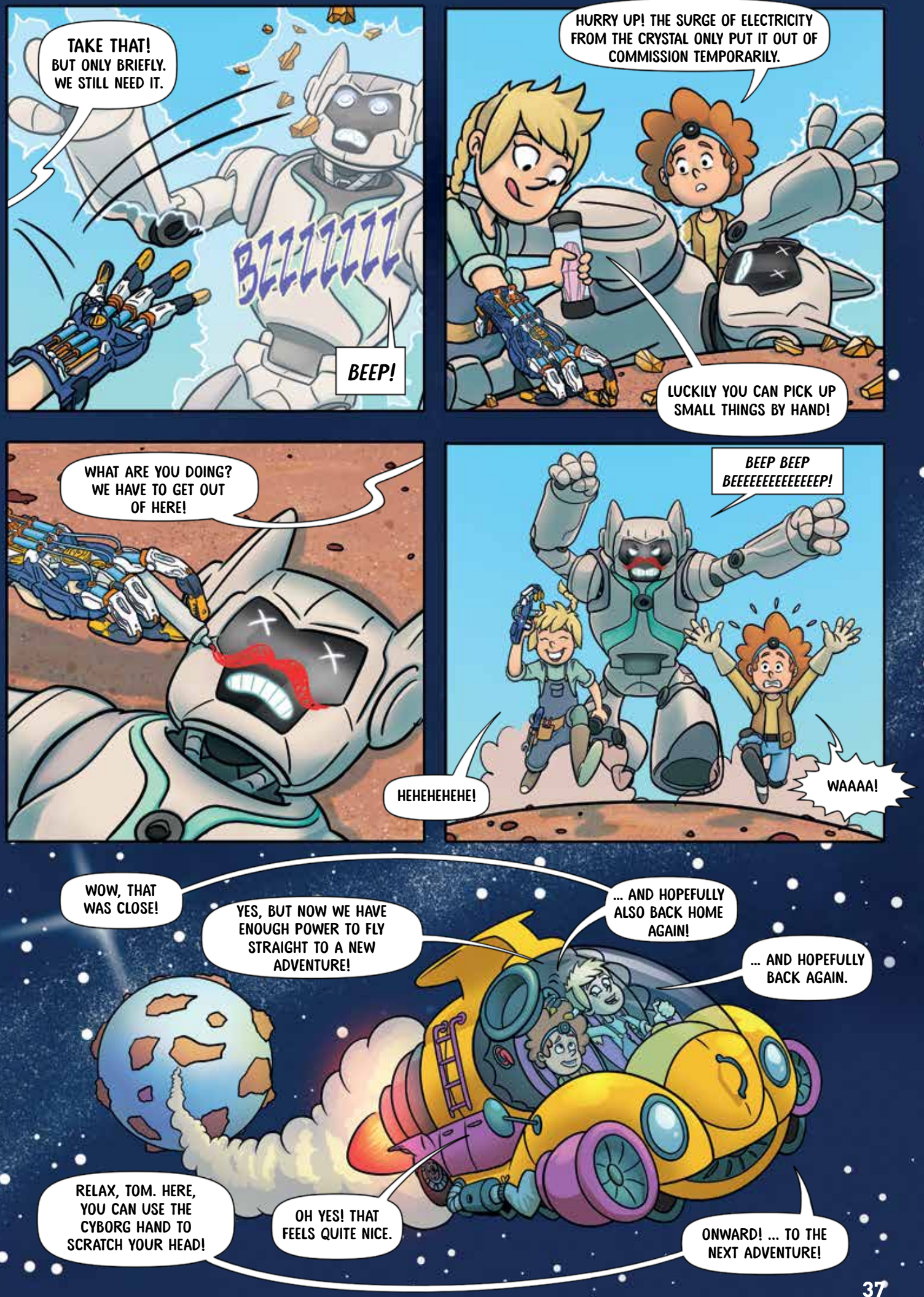
TAKE THAT!
BUT ONLY BRIEFLY. WE STILL NEED IT.
BZZZZZZZ
BEEP!
HURRY UP! THE SURGE OF ELECTRICITY FROM THE CRYSTAL ONLY PUT IT OUT OF COMMISSION TEMPORARILY.
LUCKILY YOU CAN PICK UP SMALL THINGS BY HAND!
WHAT ARE YOU DOING? WE HAVE TO GET OUT OF HERE!
BEEP BEEP BEEEEEEEEEEEEEP!
HEHEHEHEHE!
WAAAA!
WOW, THAT WAS CLOSE!
YES, BUT NOW WE HAVE ENOUGH POWER TO FLY STRAIGHT TO A NEW ADVENTURE!
... AND HOPEFULLY ALSO BACK HOME AGAIN!
... AND HOPEFULLY BACK AGAIN.
RELAX, TOM. HERE, YOU CAN USE THE CYBORG HAND TO SCRATCH YOUR HEAD!
OH YES! THAT FEELS QUITE NICE.
ONWARD! ... TO THE NEXT ADVENTURE!



Using the Mega Cyborg Hand

You did it! Your mega cyborg hand is fully assembled. In this chapter, you will learn how to adjust the cyborg hand to fit your own hand, how to use the cyborg hand for various tasks, and which settings are best suited for the various uses. You will also learn what you can do if something is not working properly.

BASIC USAGE INSTRUCTIONS

In order for you to have fun with your mega cyborg hand for as long as possible, there are a few things to consider. When you pick up the hand, hold it as shown in the first picture.

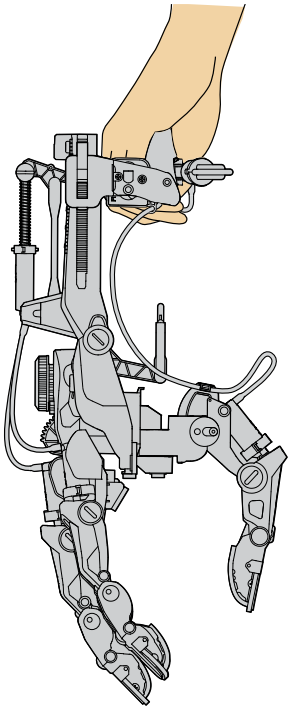

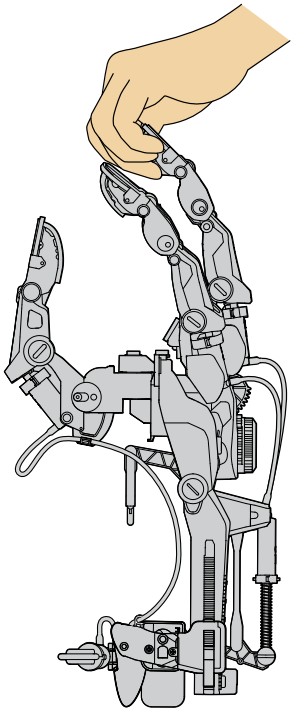

IMPORTANT!
To prevent injury, you should not touch the moving parts of the mega cyborg hand, especially if it is being operated by someone else.

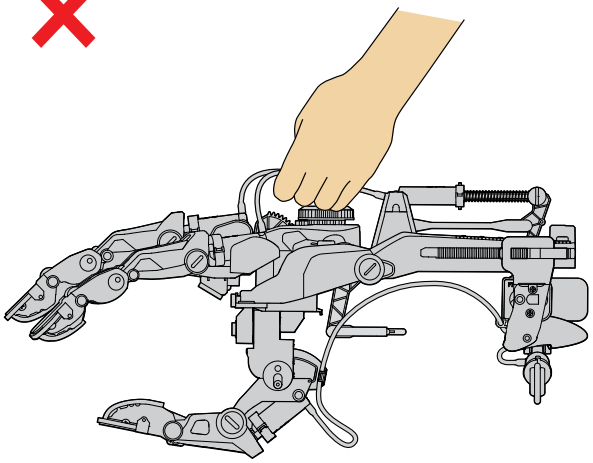

TIPS

MAKE SURE THE OBJECTS THAT YOU GRAB OR HOLD WITH YOUR MEGA CYBORG HAND ARE NOT TOO HEAVY. YOU SHOULD BE PARTICULARLY CAREFUL WITH OBJECTS THAT YOU LIFT WITH JUST ONE FINGER.

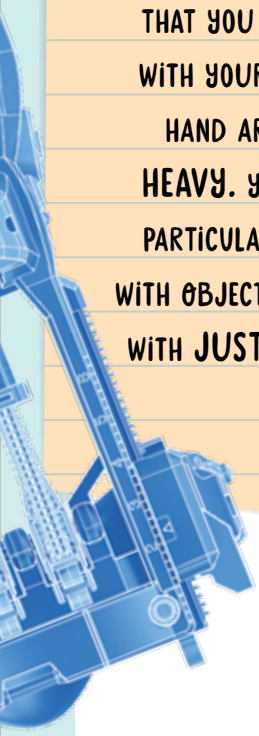

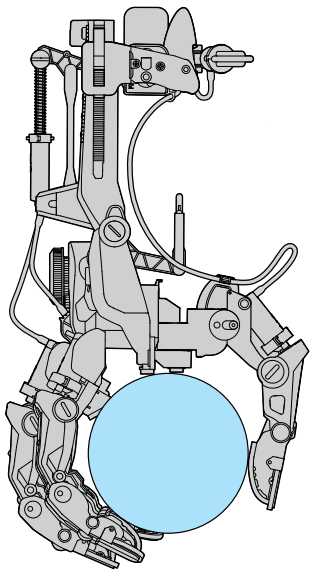

Full grip
Maximum weight
600 g

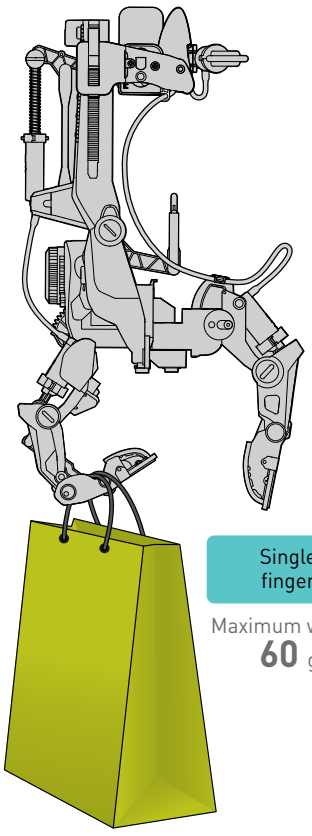

Single finger
Maximum weight
60 g

HOW TO CUSTOMIZE THE HAND

On the following pages, the hand is shown in the right-handed configuration. The same setting options apply to the left-handed configuration, just mirrored.

1

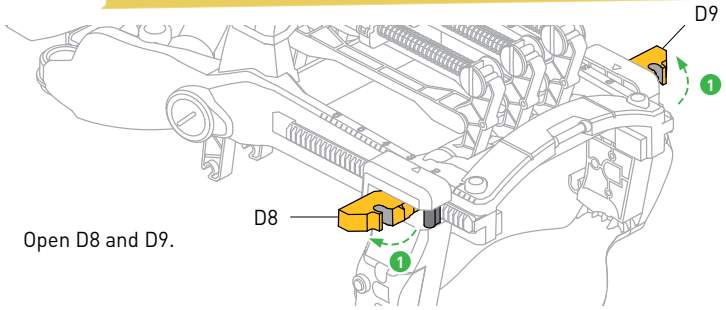

Open D8 and D9.

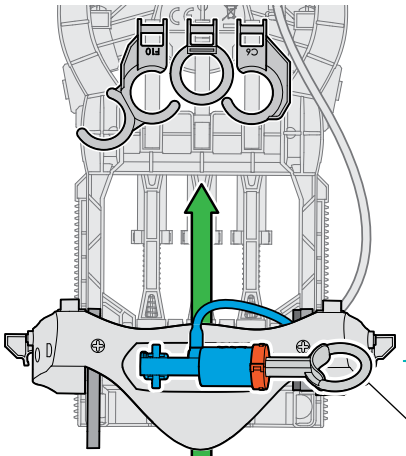

Put your hand in the device and put your thumb through the thumb control ring as shown.

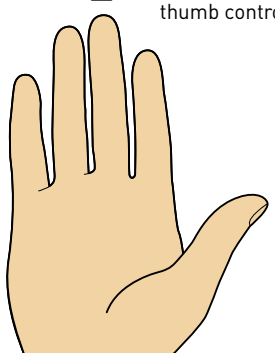

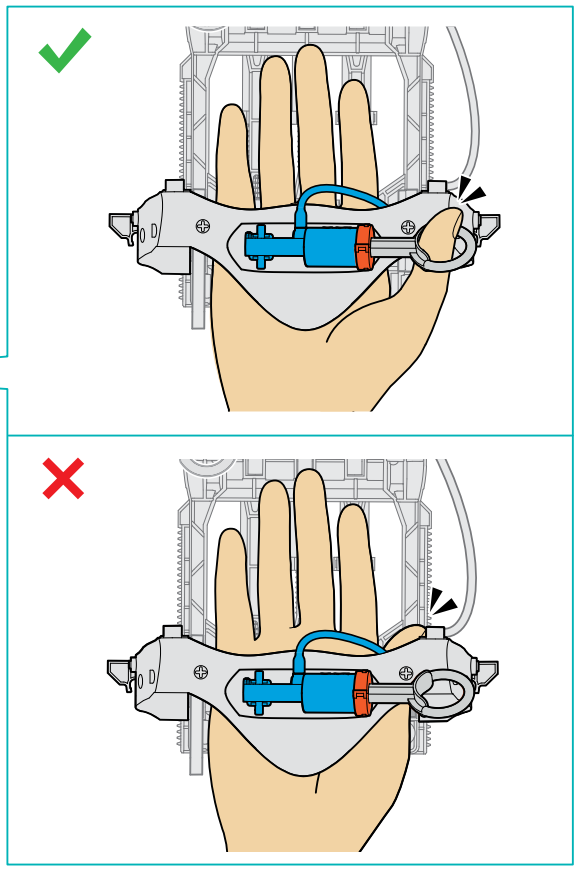

2 Move the palm rest forward or backward until you can comfortably hold the finger control rings with your fingers.

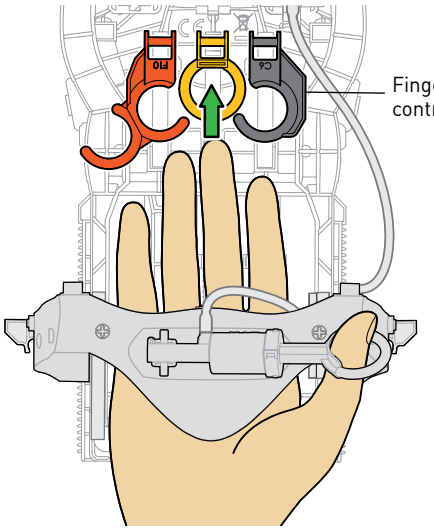

3 When you have found a good position and have a good hold on the device, you can close D8 and D9 again.

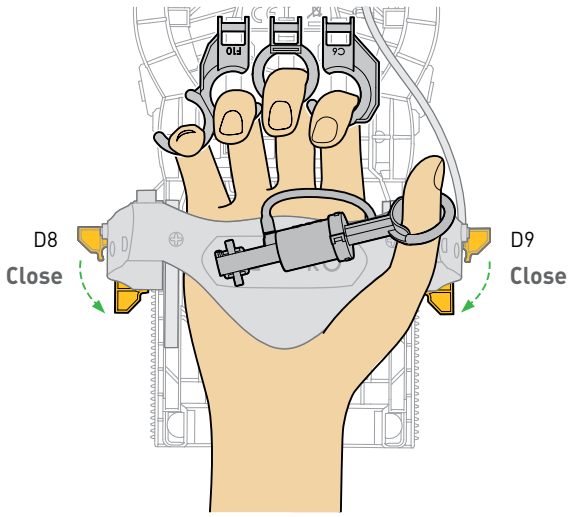

4 Use the two set screws to adjust the position of the two side rails so that your hand is centered on the palm rest.

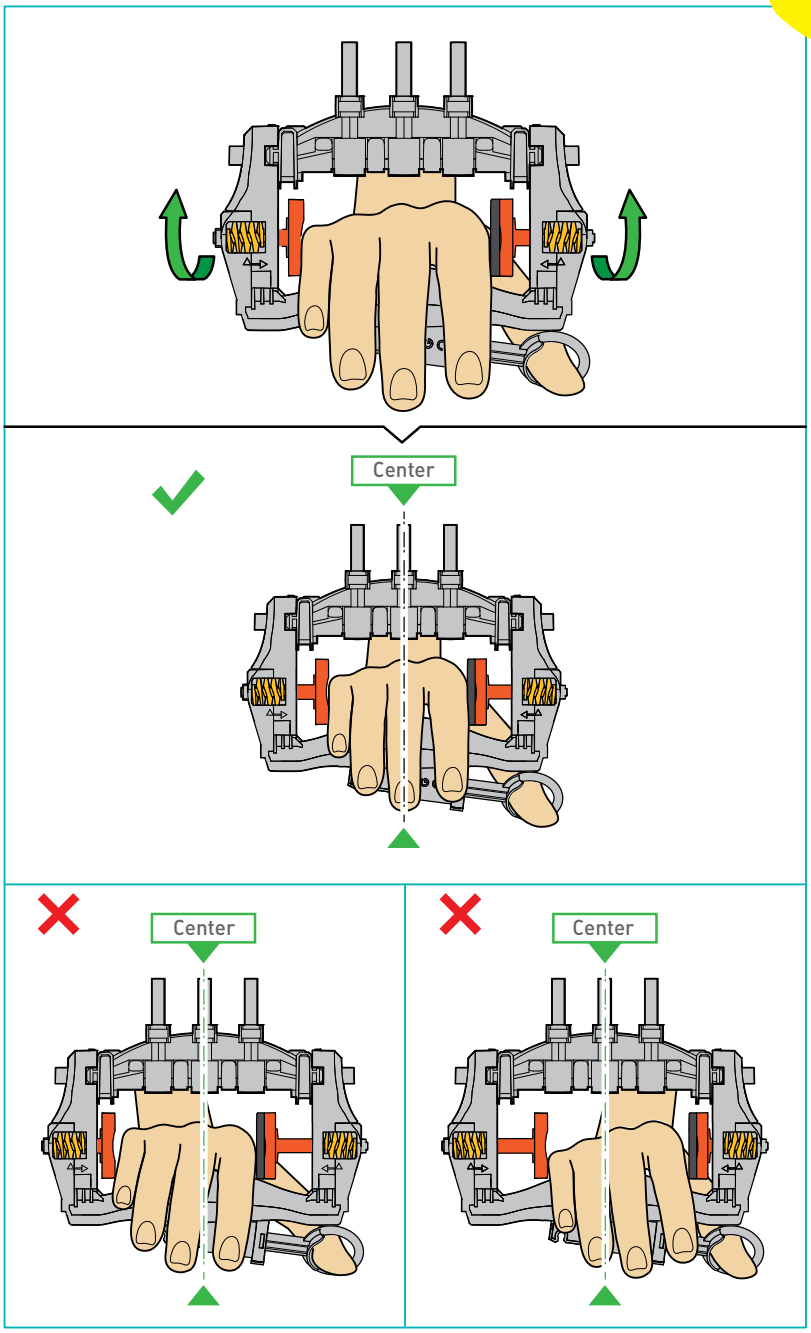

After you have adjusted the mega cyborg hand to your hand and finger length, you can now adjust the width of the palm rest area to your hand.

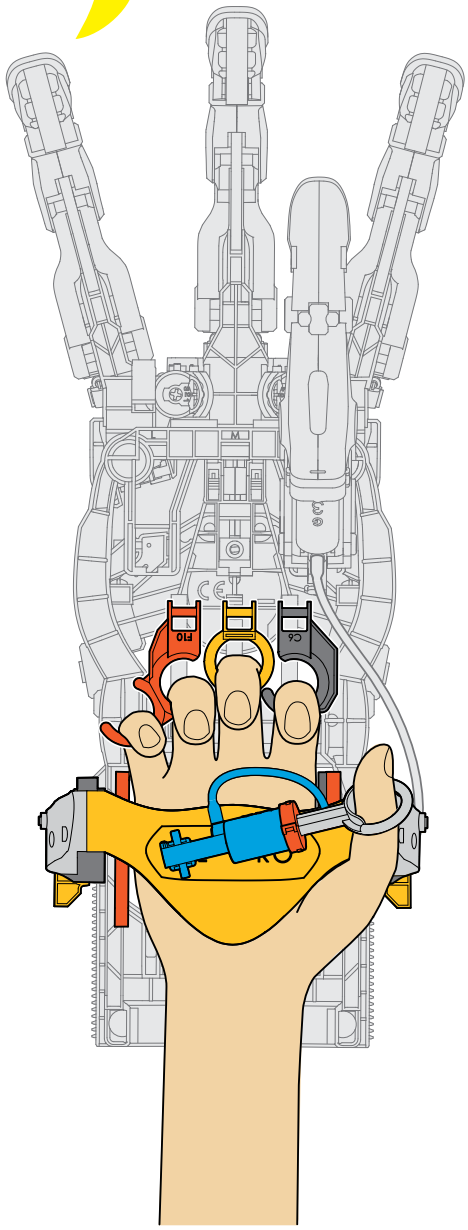

5 Done!



After you have customized the cyborg hand to fit your own hand, you can play around with the positioning of the cyborg hand's fingers and thumb.

You can use the central rotary knob on the top of the hand to continuously adjust the degree to which the fingers extend up from the hand.





You already experimented with the hydraulic system and its functions during the tests on pages 20 and 21.



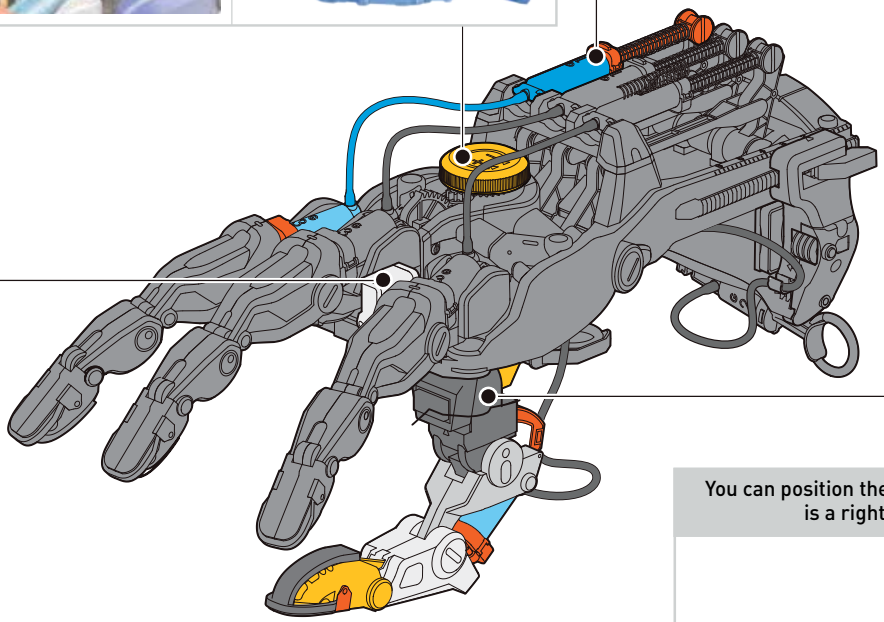

You can rotate the thumb up to 160 degrees.

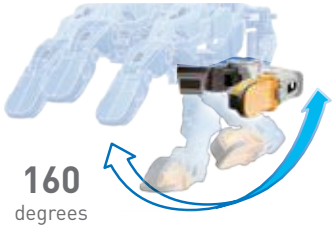

You can position the thumb so that your mega cyborg hand is a right hand, a left hand, or a claw.

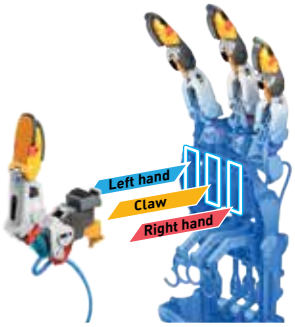

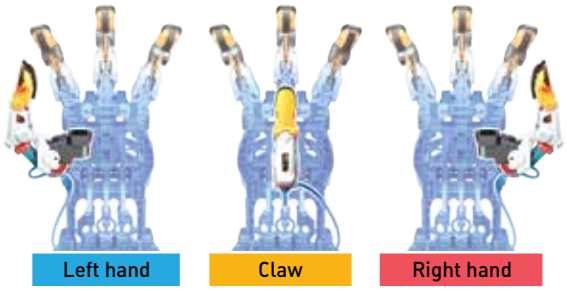

The position of the fingers can also be adjusted at the finger joints.



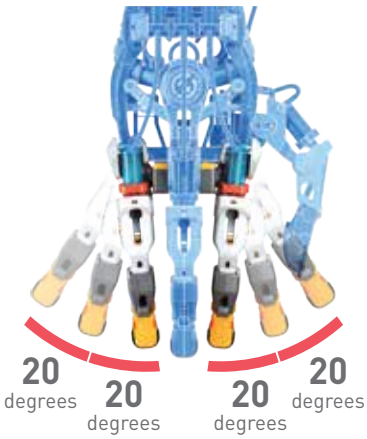

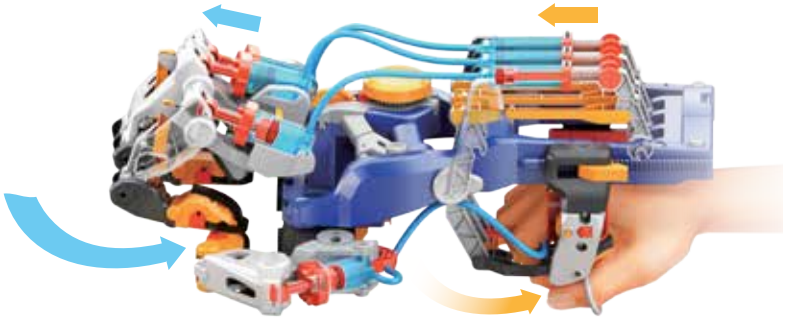

ADJUSTING THE FINGER JOINTS

You can adjust the horizontal spread of the two outer fingers in three increments using the adjustment wheel between the fingers.

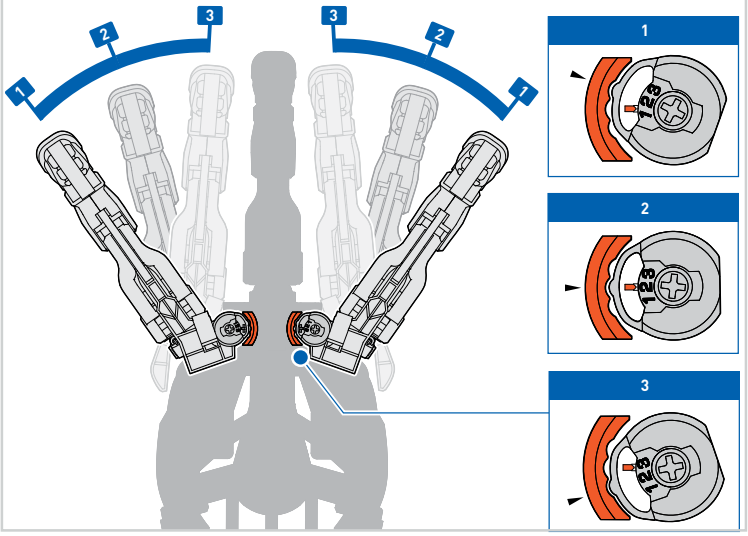

With the two small switches shown here, you can adjust the extension of the fingers in two increments.

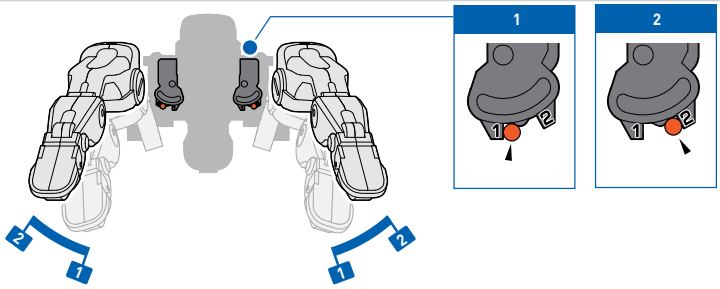

Do not bend the joints beyond their widest spread or extension. The joints could break.

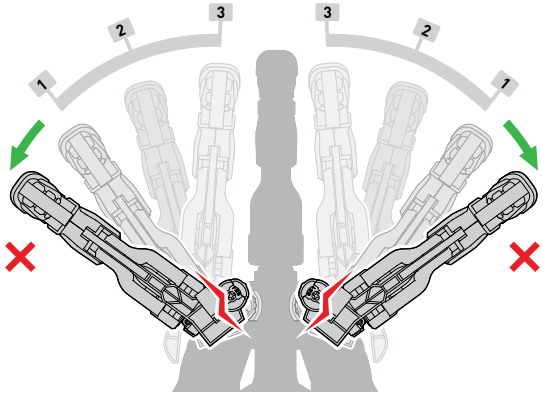

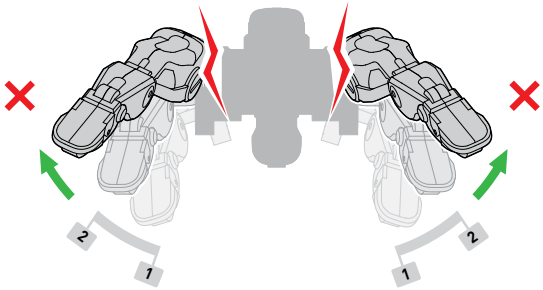

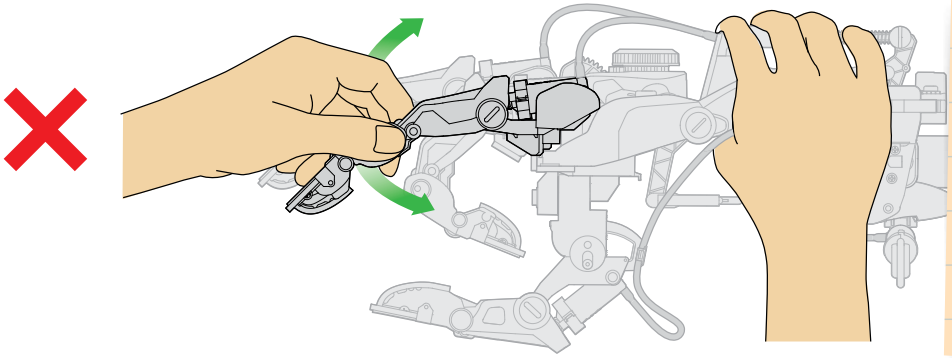

TIPS

HANDLE THE FINGER JOINTS WITH CARE. PULLING, BENDING, OR TURNING THEM TOO HARD CAN LOOSEN THE TUBES AND CAUSE A LEAK IN THE HYDRAULIC SYSTEM.

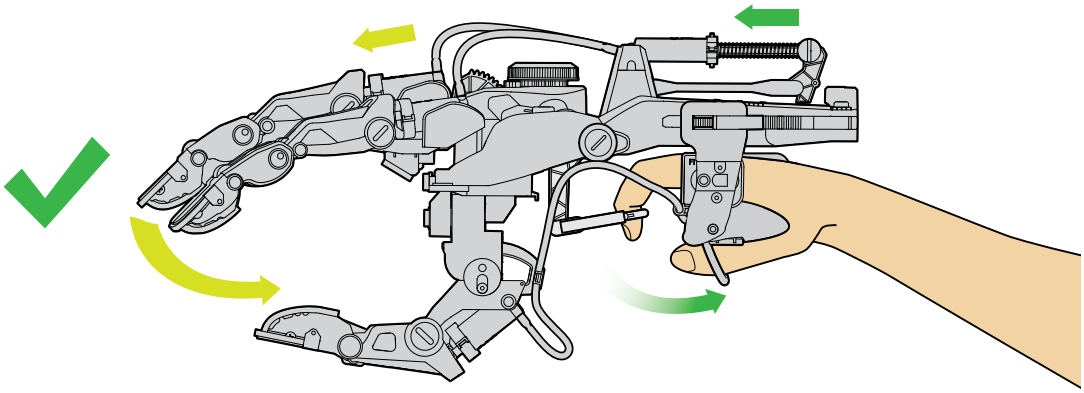

EXPERIMENT 3

Picking up small objects

On the following pages, the hand is shown in the right-handed configuration. If you want to do the exercises in the left-handed configuration, you just have to mirror the images.

You will need

- **Your mega cyborg hand**
- **Small objects**
- **Felt-tip marker**

Here's how

1. Insert the thumb into the right thumb slot. (In the left-handed configuration, the thumb goes in the left thumb slot.) Now adjust the angle of the thumb as shown in the picture.

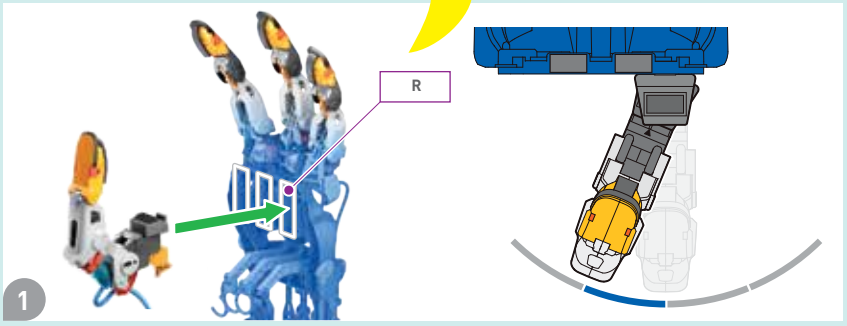

2. Adjust the finger joints. Position the knobs as shown in the picture.

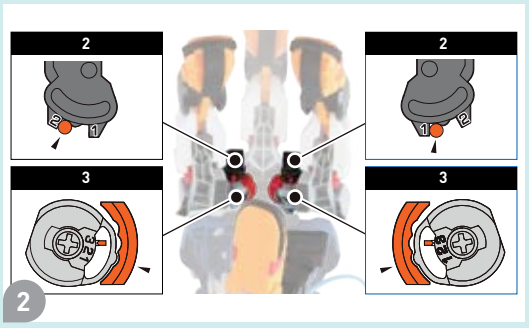

3. Adjust the extension of the fingers. To do this, turn the central rotary knob on the top clockwise until it stops.

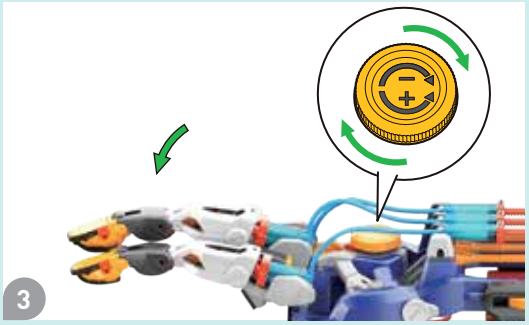

4. Adjust the hand until you have found the perfect configuration with which to pick up some small objects. It will take some practice using the hand before you are able to easily pick up various small objects. Keep trying — practice makes perfect!

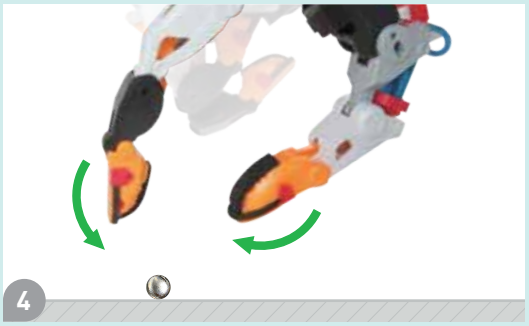

5. This hand setting is also perfect for drawing with the mega cyborg hand. To do this, place the marker on the foam pad of the thumb, as shown in the picture. Then pull the index finger control ring toward you to pinch the marker between the index finger and thumb. Now you can draw. But again, practice makes perfect.

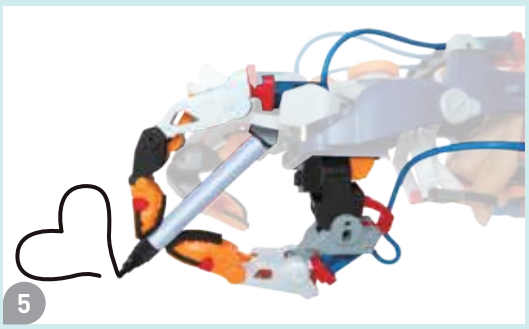

EXPERIMENT 4

Grabbing large objects

You will need

- **Your mega cyborg hand**
- **A bigger object**

Here's how

1. Place the thumb in the middle thumb slot and adjust the angle of the thumb as shown in the picture.

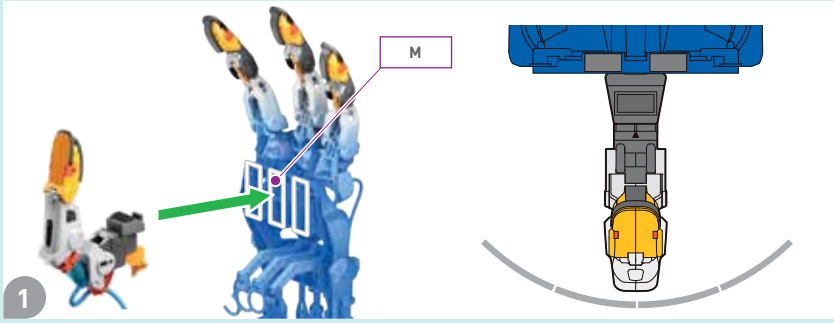

2. Position the knobs as shown in the picture.

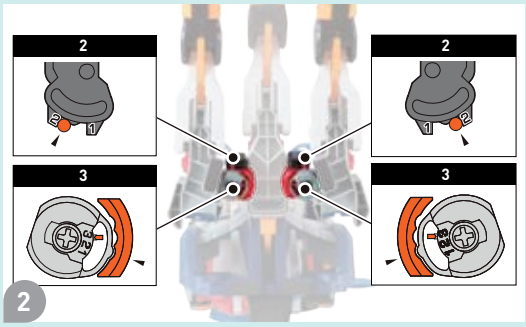

3. Turn the central rotary knob on the top counterclockwise as far as it will go to reach the maximum extension of the fingers.

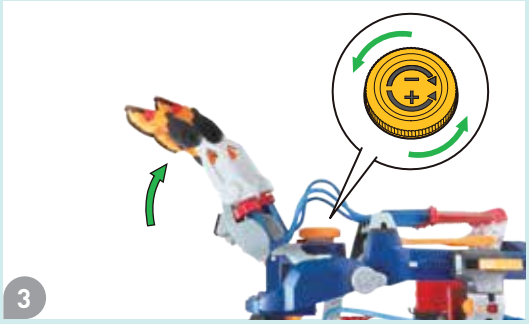





Wide grip

Maximum weight
150 g









CHECK IT OUT

Exoskeletons

Your mega cyborg hand is a machine that you can wear on your body. Therefore, you can call it an exoskeleton. Many people around the world are currently developing artificial exoskeletons because these devices could help people in a lot of different ways.



Medicine

Many people can no longer perform all the movements they would like to with their own bodies. To help people with physical disabilities, researchers and doctors are developing special exoskeletons. For example, these could help a person learn to walk again after a stroke. And people with paralysis could also use exoskeletons to move around more freely and independently.



Work and Industry

IN THEIR JOBS, MANY PEOPLE HAVE TO LIFT HEAVY THINGS OR PERFORM OTHER MOVEMENTS THAT COULD DAMAGE THE BODY, ESPECIALLY OVER TIME.

HOWEVER, IF WORKERS WEAR EXOSKELETONS, THESE POWERFUL MACHINES CAN PROVIDE MOST OF THE FORCE REQUIRED TO PERFORM DEMANDING PHYSICAL TASKS. THUS, A WORKER'S PERFORMANCE IS INCREASED AND POSSIBLE INJURIES ARE PREVENTED.



Military

Exoskeletons are even being developed for the military. Soldiers often have to carry large amounts of equipment around or lift very heavy things on the move, which makes them slow and puts them at high risk of injury. For this purpose, exoskeletons have been developed that allow soldiers to carry backpacks weighing up to 200 pounds and to lift other heavy things without effort.



Lobsters have a particularly hard exoskeleton

Exoskeletons in the animal kingdom

Around 80 percent of all animal species have an exoskeleton! That includes all arthropods, which includes insects, spiders, crabs, and many other animals. Unlike the skeletons of vertebrates (the subphylum to which we humans belong), the skeletons of arthropods are not inside the body, but serve as protection around the body. The armor-like exoskeletons are made of hard chitin and proteins. They are jointed — otherwise, the animals would not be able to move. Exoskeletons protect against environmental factors, but they cannot grow with the animals. That is why all arthropods must shed their exoskeletons regularly.

If the mega cyborg hand's fingers are not working, check the following:
1. Check if there is air in the G1 cylinder. If so, complete the steps on page 49.
2. Use pages 18–19 to check that the hydraulic cylinders are assembled correctly.
3. Check that the fingers are correctly assembled and correctly connected together (check on pages 11–15).

If the degree of extension of the mega cyborg hand's fingers cannot be adjusted properly:
Go to page 28 and check that you have followed steps 1–6 correctly.



If the mega cyborg hand's thumb doesn't work properly, check the following:
1. Check if there is air in the G2 cylinder. If so, follow the steps on page 51.
2. Check if the hydraulic tube is twisted and blocked.
3. Check that the hydraulic cylinder is assembled correctly. Compare pages 18, 19, and 23.
4. Check that you have assembled the thumb correctly. Go to pages 25-27.

Air in the cylinders limits the function of the hydraulic system. The fingers and thumb will not flex and extend as well if there is air in the hydraulic systems.

Regardless of how long you have played with the mega cyborg hand, air can get into the hydraulic system from time to time. You can find out how to get rid of it on the next page.

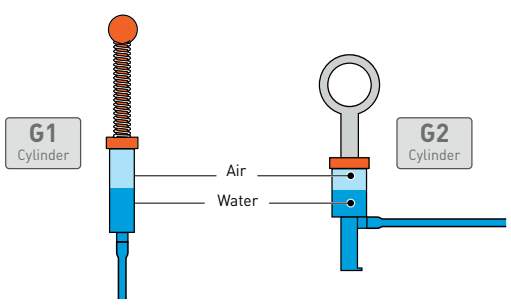

Do the fingers' hydraulic systems leak or are there air pockets in them? Then do the following:

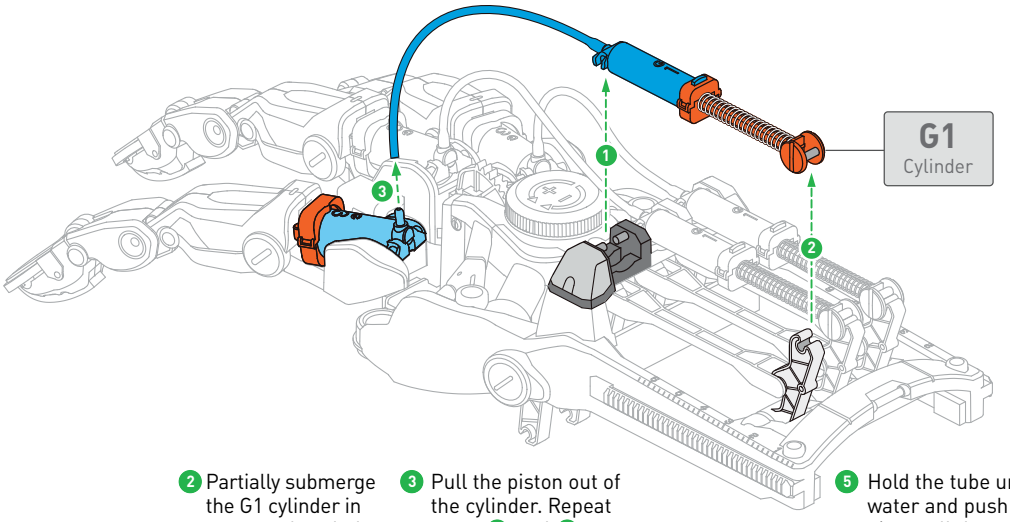

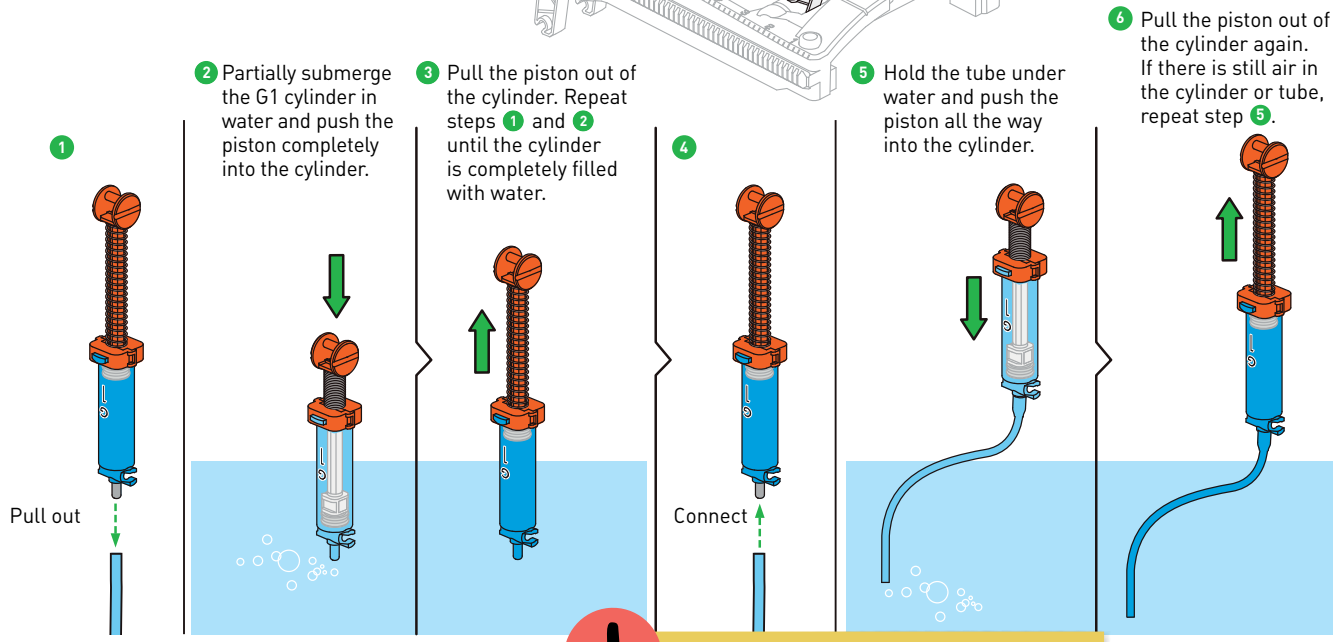

Here's how to properly connect the tube to the G3 cylinder.

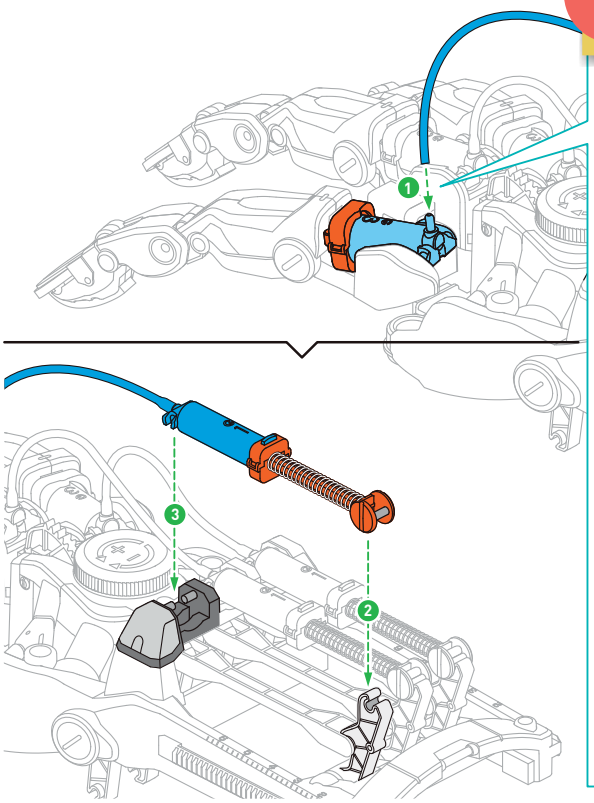

Push the piston all the way into the G3 cylinder so that no excess air remains.

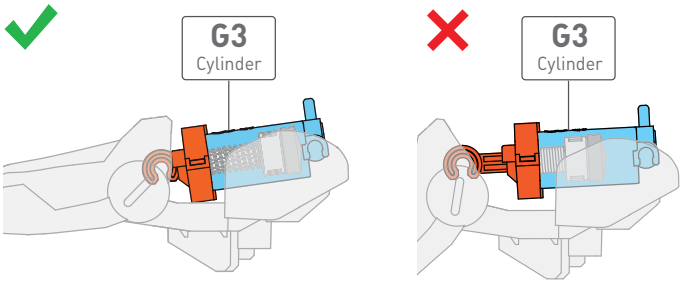

Connect the tube.

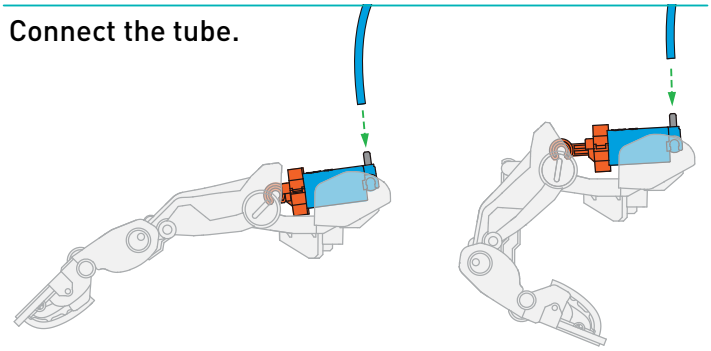

What is a cyborg?

Maybe there is someone in your family or in your class with a pacemaker or a prosthesis. If so, you already know a cyborg! That's because a cyborg is simply a combination of a human and a machine — in other words, a being that consists of both artificial and natural body parts. There are even people who would say that you are a cyborg if you wear eyeglasses, but then a lot of people would be cyborgs, and that would be a bit boring.



This boy has a cochlear hearing implant, which enables him to hear.

In the future, however, we will certainly see more people wearing various technological devices on or in their bodies. And maybe one day we will really ask ourselves whether the person standing in front of us is human or a machine.

The origin of the term "cyborg"

Two scientists named Manfred Clynes and Nathan Kline came up with the term "cyborg," combining the words "cybernetic" and "organism." That was about 60 years ago, in 1960. At that time, their goal was to make people more fit for life in outer space using high-tech equipment that could be implanted inside them. But, sixty years later, we are still a long way from that.

Did Clynes and Kline imagine a cyborg that looked like this?



TROUBLESHOOTING

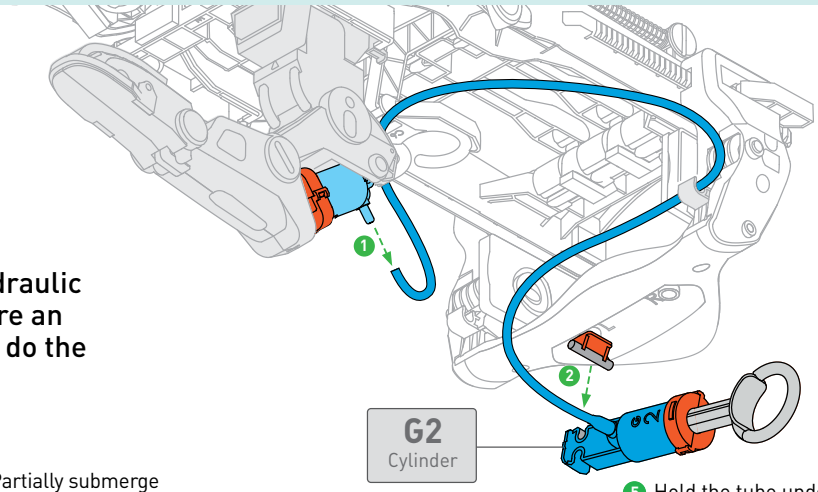

Does the thumb's hydraulic system leak or is there an air pocket in it? Then do the following:

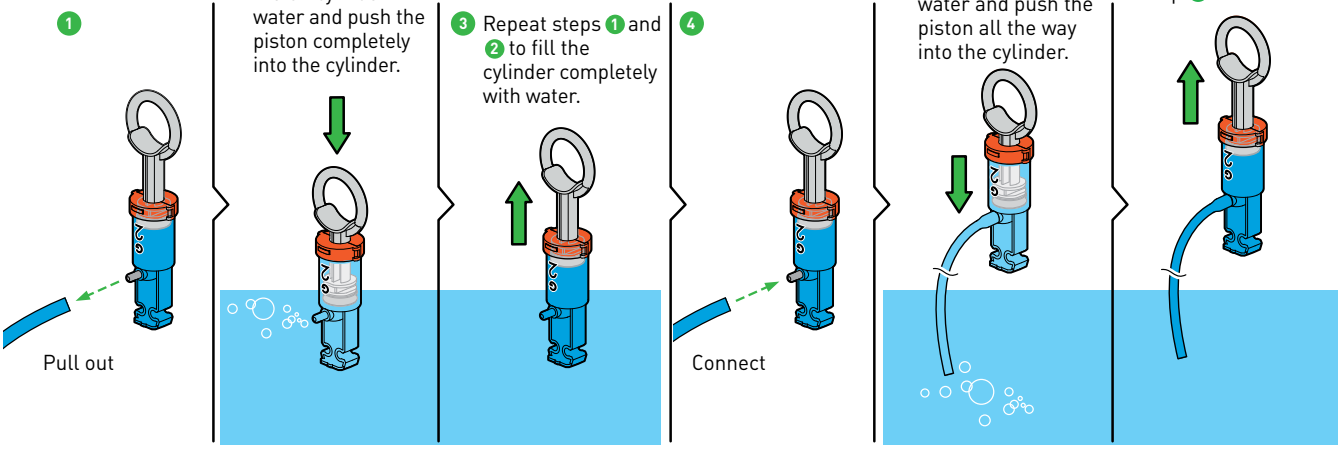

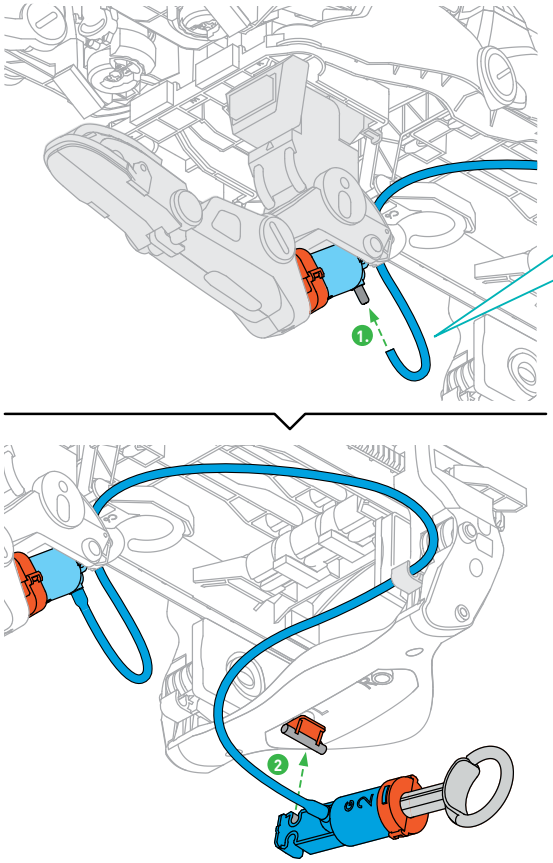

Here's how to properly connect the tube to the G3 cylinder.

Push the piston all the way into the G3 cylinder so that no excess air remains.

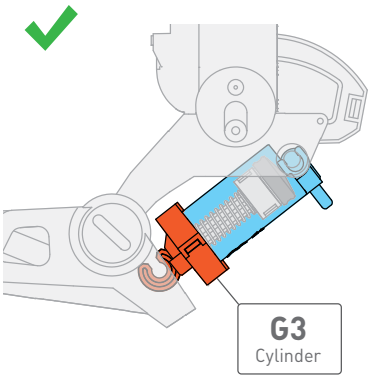

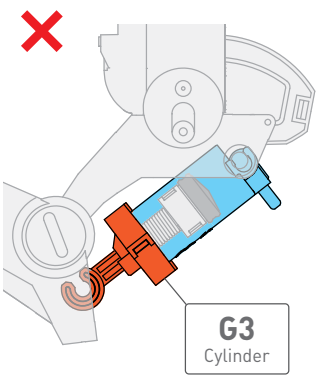

Connect the tube.

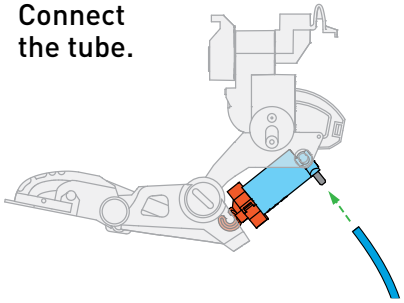

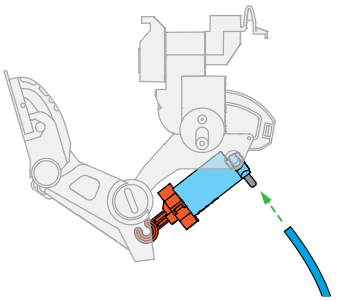

Mysterious air pressure



You will need

- Clear plastic cup
- Plastic bowl of water

Here's how

1. Fill the bowl with water.
2. Dip the cup in it so it fills with water. Then, turn it over under the water.
3. Now partially pull the cup out of the water. As long as its opening remains under the surface of the water, it will not empty out. As soon as air penetrates, all of the water in the cup runs out.

What's happening?

We live at the bottom of a huge ocean of air. The air column above us weighs heavily on us. We usually don't feel this so-called **air pressure,** mainly because all of the parts of our bodies are experiencing the same pressure and we are adapted to it. A vacuum (airless space) "feels" the full force of the air pressure. Such a vacuum would form if the water hanging in the cup flowed down under its own weight. But this is prevented by the external air pressure — it is far greater than the weight of the water in the cup. It is similar with household suction cups: Pressing creates a **vacuum** between them and the surface they are stuck to, so the **air pressure** presses the suction cup firmly against the surface.

DID YOU KNOW ...

... that a drinking straw only works thanks to air pressure? Sucking at the top creates a vacuum in it, and therefore the air pressure pushes the drink into the straw from below.





© 2020 Franckh-Kosmos Verlags-GmbH & Co. KG, Pfizerstrasse 5–7, 70184 Stuttgart, Germany

This work, including all its parts, is copyright protected. Any use outside the specific limits of the copyright law is prohibited and punishable by law without the consent of the publisher. This applies specifically to reproductions, translations, microfilming, and storage and processing in electronic systems and networks. We do not guarantee that all material in this work is free from other copyright or other protection.

Text: Richard Schmising
Project Manager: Jonathan Felder
Technical product development: Deryl Tjahja, CIC Components Industries Co., Ltd., Taiwan

Manual design concept: Atelier Bea Klenk, Berlin
Manual layout: www.evaschindler.de, Grafing
Manual illustrations: Tanja Donner, Riedlingen, Eva Schindler, Grafing, CIC Components Industries Co., Ltd., Taiwan
Comic and other illustrations: Bianca Meier; Daniel Alles
Manual Photos: Jamie Duplass (all adhesive strips); Jamesbin @shutterstock.com (Image on top of numerous pages), Binimin, p. 8 l; zhaoliang70 p. 16 m; Juan Enrique del Barrio p. 24 ml; Dmitry Kalinovsky p. 24 ul; Dreamsquare p. 24 or; genkur p. 24 ur; Andrey Suslov p. 38 o; Redshinestudio 46 om; studiostoks p. 46 or; Ivan Chudakov p. 46 u; Frederic Legrand p. 47 l; altih p. 47 r; Kalah_R p. 50 l; Kiselev Andrej Valerevich p. 50 r (all shutterstock.com); Tanja Donner p. 20, 21, 52

Packaging design concept: Peter Schmidt Group, Hamburg
Packaging layout: Studio Gibler, Stuttgart
Packaging photos: CIC Components Industries Co., Background graphic: Studio Gibler

The publisher has made every effort to identify the owners of the rights to all photos used. If there is any instance in which the owners of the rights to any pictures have not been acknowledged, they are asked to inform the publisher about their copyright ownership so that they may receive the customary image fee.

1st English Edition © 2020 Thames & Kosmos, LLC, Providence, RI, USA
Thames & Kosmos® is a registered trademark of Thames & Kosmos, LLC.
Editing: Ted McGuire; Additional Graphics and Layout: Dan Freitas

Distributed in North America by Thames & Kosmos, LLC. Providence, RI 02903
Phone: 800-587-2872; Web: www.thamesandkosmos.com

We reserve the right to make technical changes.

Printed in Taiwan



Do you have any questions?
Our customer service team will be glad to help you!

Thames & Kosmos US
Email: support@thamesandkosmos.com
Web: thamesandkosmos.com
Phone: 1-800-587-2872

620501-03-220420